# McHale F5500

QUALITY
I.S. EN ISO 9001:2015
NSAI Certified

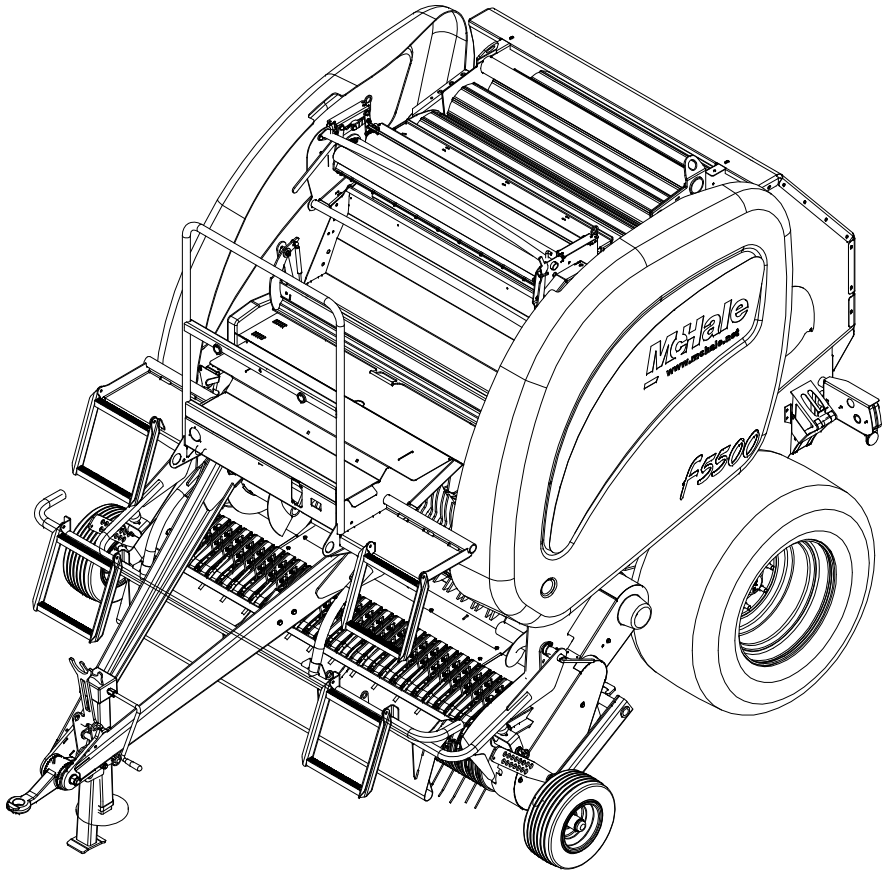


# F5500
## Spare Parts Book

McHale,
Ballinrobe,
Co. Mayo, Ireland.

Tel: +353 94 9520300
Fax: +353 94 9520356
Email: sales@mchale.net
**Website: www.mchale.net**

This page is intentionally left blank

# Introduction

The ***McHale* F5500** which you have purchased has been developed through years of constant research and development. Given proper care and attention the **F5500** will give years of reliable and dependable performance. However it is important that the operators manual is read and fully understood to achieve this, **before** the machine is operated. As part of this philosophy it is vital to use only **genuine *McHale*** replacement parts, as these are manufactured to the same high standard as the original machine. These may be obtained through your ***McHale*** dealer.

If any part of this manual is not fully understood, please contact your ***McHale*** dealer who will be able to answer any questions or queries that you might have. It is important to quote the machine serial number when requiring spare parts or technical assistance. Space is provided below to record the machine details:

| | |
|---|---|
| **Serial number:** | |
| **Year of manufacture:** | |
| **Date of delivery:** | |

If you require further copies of this spare parts manual please
quote part number CLT00447

***Note:*** Parts described as left and right are done so according to the direction that the machine normally travels in.

***Note:*** Due to a policy of continuous product development and improvement *McHale Engineering* reserve the right to alter machine specifications without prior notice.

# Contents


| Section | Page | Document |
|---|---|---|
| **Pick-Up Unit** | | |
| Pick-up reel shaft (805) | 6 | SPD00805 |
| Pick-up reel shaft flex [Camless] (977) | 8 | SPD00977 |
| Pick-up reel chassis (804) | 10 | SPD00804 |
| Pick-up reel chassis flex [Camless] (978) | 12 | SPD00978 |
| Pick-up 3 (898) | 14 | SPD00898 |
| Pick-up 4 (896) | 16 | SPD00896 |
| Pick-up 5 (897) | 18 | SPD00897 |
| Pick-up drop floor [Up to Serial No 710801 (F5) 803232 (V6) 900299 (Vario)] (753) | 20 | SPD00753 |
| Pick-up drop floor suspension (971) | 22 | SPD00971 |
| Pick-up drop floor select (803) | 24 | SPD00803 |
| Pick-up drop floor suspension select (976) | 26 | SPD00976 |
| Crop roller [On Fusion-F5-V6 from Serial No 655681-706661-800616] (775) | 28 | SPD00775 |
| Crop roller double (966) | 30 | SPD00966 |
| Crop roller triple [From Serial No, (F5) 712699 & (V6) 805523] (1134) | 32 | SPD01134 |
| **PTO shaft & Gearbox** | | |
| PTO shaft [WWE2480] | 34 | SPD00491 |
| Gearbox 1 (134) | 36 | SPD00134 |
| Gearbox 2 [540 RPM] (135) | 38 | SPD00135 |
| Gearbox 3 [1000 RPM] (1132) | 40 | SPD01132 |
| **Chassis** | | |
| Drawbar (952) | 42 | SPD00952 |
| Screw type jack (349) | 44 | SPD00349 |
| Steps & Platform (739) | 46 | SPD00739 |
| Chassis (748) | 48 | SPD00748 |
| Bale dropper (750) | 50 | SPD00750 |
| Axle & wheels (749) | 52 | SPD00749 |
| Axle braked (838) | 54 | SPD00838 |
| Axle brake actuator brackets (754) | 56 | SPD00754 |
| Handbrake F5000 (847) | 58 | SPD00847 |
| Air brake kit F5000 (764) | 60 | SPD00764 |
| Chains & Belts (751) | 62 | SPD00751 |
| Panels (747) | 64 | SPD00747 |
| **Bale chamber** | | |
| Front Chamber RHS (741) | 66 | SPD00741 |
| Front chamber LHS (742) | 68 | SPD00742 |
| Rear chamber door RHS (745) | 70 | SPD00745 |
| Rear chamber door LHS (746) | 72 | SPD00746 |
| Chain tensioners (744) | 74 | SPD00744 |
| Slatted Roller No.1A (731) | 76 | SPD00731 |
| Std Ribbed Roller Type-B (732) | 78 | SPD00732 |
| Std Ribbed Roller Type-C (733) | 80 | SPD00733 |
| Ribbed roller Type-D (734) | 82 | SPD00734 |
| Ribbed Roller Type-E (735) | 84 | SPD00735 |
| **Netter [Up to Serial No 708066]** | | |
| Netter 1 (737) | 86 | SPD00737 |
| Netter 2 (738) | 88 | SPD00738 |
| Net Tensioner (740) | 90 | SPD00740 |
| **Netter [From Serial No 708067]** | | |
| Netter 1 (903) | 92 | SPD00903 |
| Netter 2 (856) | 94 | SPD00856 |
| Net tensioner (902) | 96 | SPD00902 |
| **Hydraulics & Electrics** | | |
| Hydraulic layout F5500 (802) | 98 | SPD00802 |

| Section | Page | Document | Section | Page | Document |
|---|---|---|---|---|---|
| Valve knives & floor [Used on all F5500 & on V660 from Serial No 800276+] (801) | 100 | SPD00801 | | | |
| Hydraulic valve chamber door (178) | 102 | SPD00178 | | | |
| Hydraulic rams pick-up reel CRA00186 (182) | 104 | SPD00182 | | | |
| Hydraulic rams chamber door CRA00557 (183) | 106 | SPD00183 | | | |
| Oil & Grease systems 1 (186) | 108 | SPD00186 | | | |
| Oil & Grease systems 2 (187) | 110 | SPD00187 | | | |
| Electrical control [Up to Serial No 709205] (759) | 112 | SPD00759 | | | |
| Electrical control [From Serial No 709206] (946) | 114 | SPD00946 | | | |
| G-Wiz control unit (1076) | 116 | SPD01076 | | | |
| Electrical lighting kit (760) | 118 | SPD00760 | | | |
| Camera & monitor kit (1079) | 120 | SPD01079 | | | |
| **Decals** | | | | | |
| Decals 1 (755) | 122 | SPD00755 | | | |
| Decals 2 (756) | 124 | SPD00756 | | | |
| Decals 3 (757) | 126 | SPD00757 | | | |
| Decals 4 (758) | 128 | SPD00758 | | | |

## ***Pick-up reel shaft (805)***

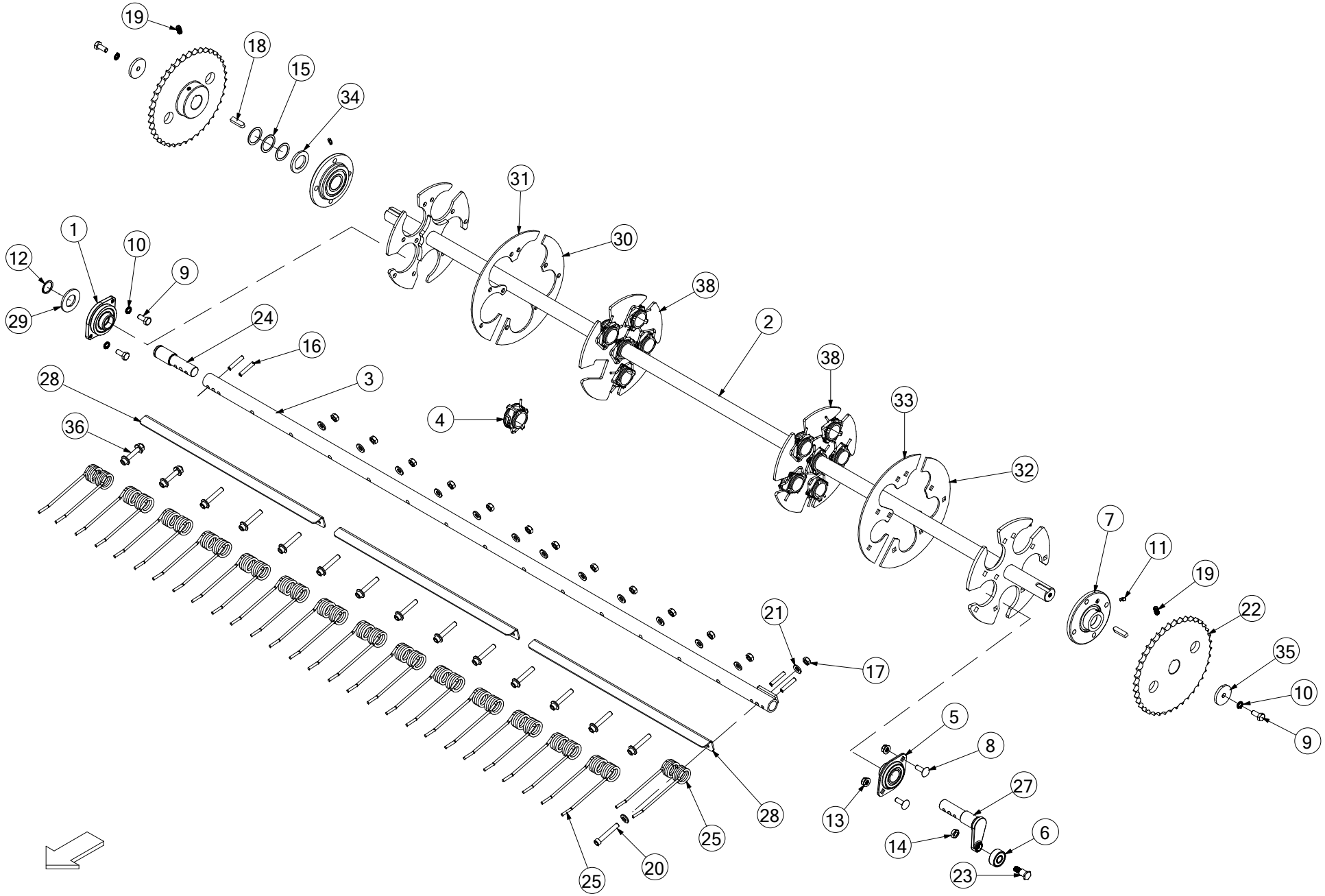

| No. | Part No | Description | Qty |
|---|---|---|---|
| 1 | ACH02226 | REEL BEARING FLOATING ASSY | 5 |
| 2 | ACN00046 | PICK UP REEL SHAFT ASSY 5 BAR | 1 |
| *5 TINE BAR REEL (OLDER 4 TINE BAR REEL MACHINES SHOULD ORDER ACH00309 INSTEAD)* | | | |
| 3 | ALA00046 | TINE BAR ASSY REEL | 5 |
| 4 | ALA00177 | BUSHING CENTER (ASSY) REEL | 12 |
| 5 | CBR00072 | BEARING INA 2 BOLT RAE 30 NPPB | 5 |
| 6 | CBR00081 | BEARING CAM INA LR 5202 NPPU | 5 |
| 7 | CBR00092 | BEARING CIRCR FLNGE INA PME 35 | 2 |
| 8 | CFA00017 | SETSCREW M10X30 CUP SQ Z/P | 10 |
| 9 | CFA00024 | SETSCREW M10X25 Z/P | 12 |
| 10 | CFA00137 | WASHER SPRING 10MM H.D Z/P | 12 |
| 11 | CFA00217 | GREASE NIPPLE M6X1.0 ST | 2 |
| 12 | CFA00402 | CIRCLIP 30MM EXTERNAL | 5 |
| 13 | CFA00443 | NUT M10 SERRATED FLANGE (DIN 6923) | 10 |
| 14 | CFA00446 | NUT M12 HEXAGON LOCK/HALF NUT | 5 |
| 15 | CFA00512 | SHIM 35X45X1.0 Z/P | 3 |
| 16 | CFA00538 | SPIROL PIN 8X45 S/C | 20 |
| 17 | CFA00541 | NUT M10 BRINKS SELF LOCKING | 5 |
| 18 | CFA00239 | KEY 10X8X40 STRAIGHT | 2 |
| 19 | CFA00625 | M10 x 20 GRUBSCREW | 2 |
| 20 | CFA00725 | BOLT M10X65 SOC CAP | 5 |
| 21 | CFA02244 | TINE BOLT WASER FOR P/U REEL | 10 |
| 22 | CMH00621 | PLATWEHEEL 3/4" PITCH 40 T | 2 |
| 23 | CMH00672 | BOLT SHOULDER 3/4" H | 5 |
| 24 | CMH00843 | SHAFT 30X125 STEPPED & C-HOLES | 5 |
| 25 | CTN00008 | TINE PICK UP REEL BALER | 75 |
| 27 | CTP00251 | CAM AXLE (FORGED) | 5 |
| *REPLACES ACH00310 CAM AXLE WELD* | | | |
| 28 | CZC05674 | 3MM L PU TINE BAR ANGLE 5 HOLE W/T SLOTS | 15 |
| *OLDER MACHINES USING 1x ITEM 38 USED 5x CZC02139 & 5x CZC02140 UP TO SERIAL No 709518 (F5), 802179 (V6)* | | | |
| 29 | CZD02325 | 4MM L WASHER 30X58X4 Z/P | 5 |
| 30 | CZD04424 | 4MM L GRASS GUARD 5 TINE BAR REEL | 1 |
| 31 | CZD04425 | GRASS GUARD 5 TINE BAR REEL | 1 |
| *USED ON 5 TINE BAR REEL ONLY (SHOWN)* | | | |
| 31 | CZD02285 | 4MM L REEL GRASS PLATE 4 TINE | 4 |
| *USED ON 4 TINE BAR REEL ONLY* | | | |
| 32 | CZD04701 | 4MM L REEL SHAFT BOLT ON END PLATE | 1 |
| 33 | CZD04702 | 4MM L REEL SHAFT BOLT ON END PLATE | 1 |
| 34 | CZE00156 | 5MM L WASHER 35X55X5 Z/P | 1 |
| 35 | CZF02215 | 6MM L WASHER 10.5X50X6 Z/P | 2 |
| 36 | KST00058 | KIT BOLTS FOR PICKUP TINES X10 | 7 |
| *INCLUDES BOLTS, NUTS & WASHERS (SOLD IN MULTIPLES OF 10)* | | | |
| 38 | APU00005 | 5 TINE CENTER DISK REPAIR KIT | 2 |
| *(INCLUDES ITEM 4) QTY WAS 1x PRIOR TO SERIAL No 709518 (F5), 802179 (V6)* | | | |

| No. | Part No | Description | Qty |
|---|---|---|---|

## Pick-up reel shaft flex [Camless] (977)

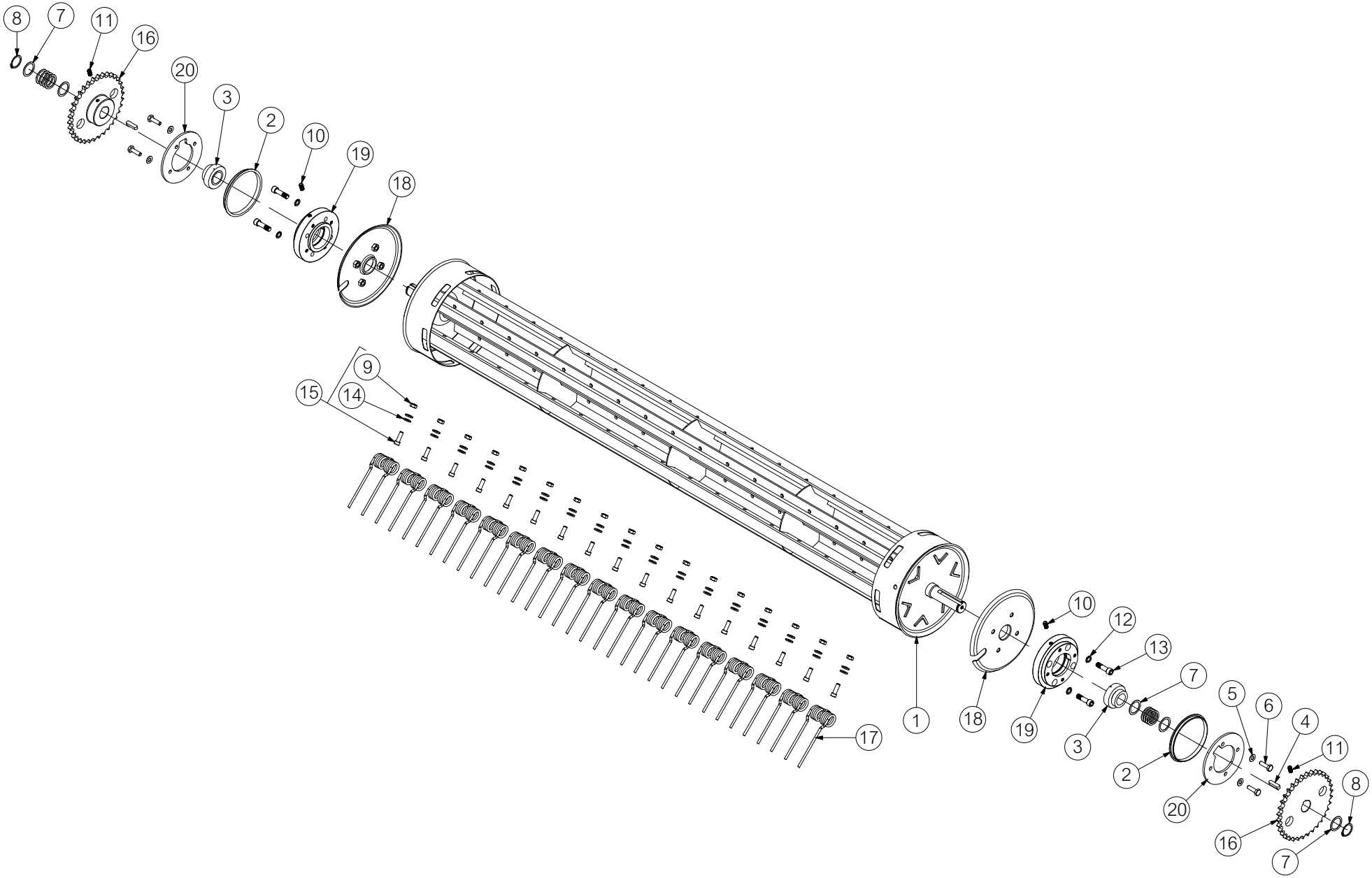

| No. | Part No | Description | Qty |
|---|---|---|---|
| 1 | KST00099 | CAMLESS REEL DRUM RETROFIT KIT<br>*UP TO SERIAL No 664795 (FUSION 3), 712937 (F5), 805675 (V6) & 900611 (VARIO)* | 1 |
| 1 | APU00010 | CAMLESS REEL ROTOR WELD ASSEM<br>*FROM SERIAL No 664796 (FUSION 3), 712938 (F5), 805676 (V6) & 900612 (VARIO)* | 1 |
| 2 | CBR00327 | 135MM FLANGE BEARING (GFM 135140-10.5) | 2 |
| 3 | CBR00328 | 35MM SPHERICAL BEARING GRAE 35 NPPB<br>*UP TO SERIAL No 664795 (FUSION 3), 712937 (F5), 805675 (V6) & 900611 (VARIO)* | 2 |
| 3 | CBR00361 | 40MM SPHERICAL BEARING GRAE 40 NPPB<br>*FROM SERIAL No 664796 (FUSION 3), 712938 (F5), 805676 (V6) & 900612 (VARIO)* | 2 |
| 4 | CFA00046 | KEY 10X8X35<br>*REPLACES CFA00239 (KEY 10X8X40)* | 2 |
| 5 | CFA00251 | WASHER SKM10 | 8 |
| 6 | CFA00311 | SETSCREW M10X35 Z/P | 8 |
| 7 | CFA00512 | SHIM 35X45X1.0 Z/P<br>*UP TO SERIAL No 664795 (FUSION 3), 712937 (F5), 805675 (V6) & 900611 (VARIO)* | 14 |
| 7 | CFA00265 | SHIM 40X50X1.0<br>*FROM SERIAL No 664796 (FUSION 3), 712938 (F5), 805676 (V6) & 900612 (VARIO)* | 14 |
| 8 | CFA00514 | CIRCLIP 35MM EXTERNAL DIN 471<br>*UP TO SERIAL No 664795 (FUSION 3), 712937 (F5), 805675 (V6) & 900611 (VARIO)* | 2 |
| 8 | CFA00551 | CIRCLIP 40MM EXTERNAL DIN 471<br>*FROM SERIAL No 664796 (FUSION 3), 712938 (F5), 805676 (V6) & 900612 (VARIO)* | 2 |
| 9 | CFA00541 | NUT M10 BRINKS SELF LOCKING<br>*PART OF KIT (ITEM 15)* | 102 |
| 10 | CFA00550 | ROTOR BEARING GREASE FITTING 6MM X 1/8" M/M | 2 |
| 11 | CFA00625 | M10 x 20 GRUBSCREW | 2 |
| 12 | CFA00799 | WASHER M12 NORDLOC | 8 |
| 13 | CFA01095 | BOLT M12X45 SOC CAP ZP 10.9 | 8 |
| 14 | CFA02244 | TINE BOLT WASER FOR P/U REEL<br>*PART OF KIT (ITEM 15)* | 204 |
| 15 | KST00065 | TINE BOLT KIT SOC CAP (M10X30)<br>*INCLUDES NUTS & WASHERS (ITEMS 9 & 14) SOLD IN MULTIPLES OF 10* | 11 |
| 16 | CMH01122 | PLATEWEHEEL 3/4 PITCH 34T (35MM BORE)<br>*UP TO SERIAL No 664795 (FUSION 3), 712937 (F5), 805675 (V6) & 900611 (VARIO)* | 2 |
| 16 | CMH01908 | PLATEWEHEEL 3/4 PITCH 34 T (40MM BORE)<br>*FROM SERIAL No 664796 (FUSION 3), 712938 (F5), 805676 (V6) & 900612 (VARIO)* | 2 |
| 17 | CTN00025 | TYNE CAMLESS REEL | 102 |
| 18 | CTP00467 | CAMLESS REEL GRASS CENTER DISK | 2 |
| 19 | CTP00490 | FLEX CAMLESS PIVOT BUSH (35MM BRG)<br>*UP TO SERIAL No 664795 (FUSION 3), 712937 (F5), 805675 (V6) & 900611 (VARIO)* | 2 |
| 19 | CTP00609 | CAMLESS PIVOT BUSH (40MM BEARING )<br>*FROM SERIAL No 664796 (FUSION 3), 712938 (F5), 805676 (V6) & 900612 (VARIO)* | 2 |
| 20 | CZF07489 | 6MM L COVER PLATE FLEXI CAMLESS | 2 |

| No. | Part No | Description | Qty |
|---|---|---|---|

## Pick-up reel chassis (804)

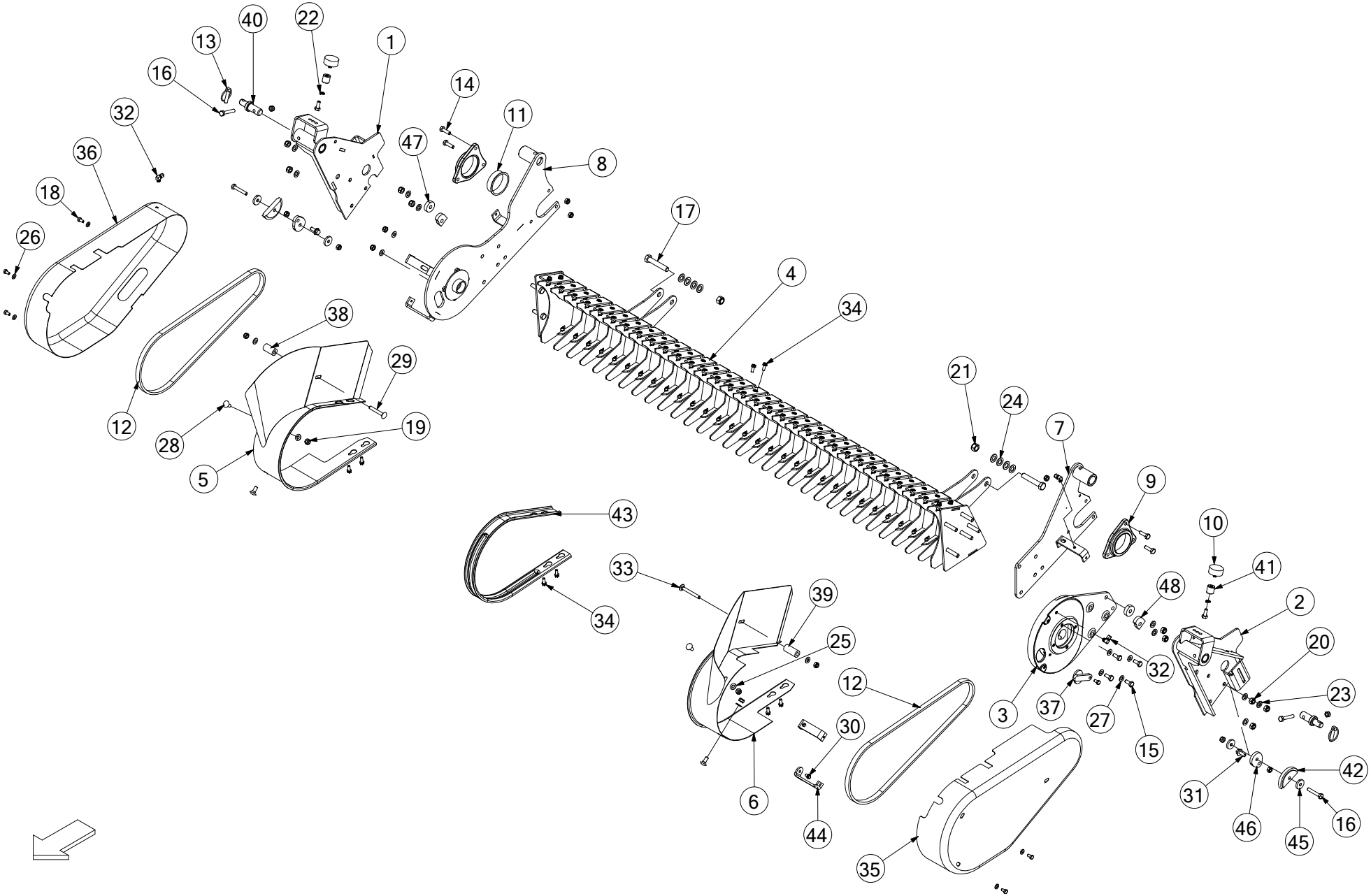

| No. | Part No | Description | Qty |
|---|---|---|---|
| 1 | ACH00298 | REEL WELD ASSY OUTER (RIGHT) | 1 |
| 2 | ACH00301 | REEL WELD ASSY OUTER (LEFT) | 1 |
| 3 | ACH00308 | CAM TRACK ASSY | 1 |
| *INCLUDES ITEMS 15, 27, 30, 44 & CTP00252* | | | |
| 3 | CTP00252 | CAM TRACK CAST | 1 |
| 3 | ACH00354 | CAM TRACK (DUTCH) | 1 |
| *FOR DUTCH MACHINES ONLY* | | | |
| 4 | ACH01004 | REEL BACK PLATE WELD ASSY | 1 |
| 5 | ACH02315 | OUTER BAND RHS | 1 |
| 6 | ACH02316 | OUTER BAND LHS | 1 |
| 7 | ACH02351 | REEL INNER BRACKET LEFT FUSION II | 1 |
| 8 | ACH02352 | REEL INNER BRACKET RIGHT FUSION II | 1 |
| 9 | ALA00314 | PICKUP REEL PIVOT BRACKET KIT | 1 |
| *KIT CONTAINS 2 HOUSINGS & 2 IGUS BEARINGS (ITEM 11)* | | | |
| 10 | CBE00182 | BUFFER RUBBER 50X21 M10X13 | 2 |
| 11 | CBR00274 | BEARING IGLIDUR GFM-7680-25 | 2 |
| 12 | CCH02026 | CHAIN ASA60H 3/4" 78 INC LINK | 2 |
| *(IF AUGER SPROCKET IS 19T USE AS IS & IF AUGER SPROCKET IS 15T REMOVE 2 LINKS)* | | | |
| 13 | CFA00005 | LINCH PIN 10MM | 2 |
| 14 | CFA00016 | BOLT M10X35 | 4 |
| 15 | CFA00024 | SETSCREW M10X25 Z/P | 6 |
| 16 | CFA00027 | BOLT M10X60 Z/P | 4 |
| 17 | CMH02848 | PIN CLEVIS 16X85 + DIA 4 C.HOLE | 2 |
| *REPLACES M16X90 BOLT CFA00040* | | | |
| 18 | CFA00101 | SETSCREW M8X16 Z/P | 7 |
| 19 | CFA00123 | NUT M10 NYLOC | 20 |
| 20 | CFA00124 | NUT M12 NYLOC | 10 |
| 21 | CFA00450 | SPLIT PIN 4X36 ZP | 2 |
| *REPLACES M16 NYLOC NUT CFA00128* | | | |
| 22 | CFA00137 | WASHER SPRING 10MM H.D Z/P | 2 |
| 23 | CFA00138 | WASHER FLAT 12MM Z/P | 10 |
| 24 | CFA00140 | WASHER FLAT 16MM Z/P | 8 |
| 25 | CFA00201 | WASHER FLAT 10 MM Z/P | 6 |
| 26 | CFA02414 | 8MM SKB WASHER | 6 |
| *REPLACES SKM8 WASHER CFA00249* | | | |
| 27 | CFA00251 | WASHER SKM10 | 8 |
| 28 | CFA00442 | SETSCREW M10X25 CUP SQ | 4 |
| 29 | CFA00474 | BOLT M10X70 CUP SQUARE ZP | 1 |
| 30 | CFA00492 | SETSCREW M8X12 FLANGED Z/P | 2 |
| 31 | CFA00520 | SETSCREW M10X25 FLD ZP | 2 |
| 32 | CFA00542 | OILER FITTING 90 DEG 1/8" BSP | 3 |
| *FITTING WITH NUT & OLIVE (USED ON FUSION ONLY)* | | | |
| 32 | CFA02253 | 90 DEG. 1/8" 4MM QUICK CONNECTOR | 3 |
| *PUSH-IN FITTING (USED ON F5 & V6 ONLY)* | | | |
| 33 | CFA00546 | BOLT M10X85 CUP HEAD SQ Z/P | 1 |
| 34 | CFA00766 | SETSCREW M8X20 FLANGED DIN6921 Z/P | 130 |
| 34a | CFA00764 | INSERT THREADED M8 (REEL) | 130 |
| *REPLACEMENT THREADED INSERTS FOR ITEM 4 (IF THREADING GETS DAMAGED)* | | | |
| 35 | CGD00034 | GUARD REEL LEFT HAND | 1 |
| 36 | CGD00036 | GUARD REEL RIGHT SIDE | 1 |
| 37 | CGD00050 | CAM TRACK BLANKING CAP | 1 |

| No. | Part No | Description | Qty |
|---|---|---|---|
| 38 | CMH00740 | BUSH 12X25X45 | 1 |
| 39 | CMH00741 | BUSH 12X25X55 | 1 |
| 40 | CMH01035 | PIN 25X97 AND12MM CH (Z/P) | 2 |
| 41 | CMH01088 | BUSH 10X25X25 THREADED Z/P | 2 |
| 42 | CPL00043 | PLASTIC CHAIN TENSIONER (REEL) | 2 |
| 43 | CTP00048 | BAND PICK UP REEL (BALER) | 29 |
| 44 | CZF04369 | 6MM L CAM TRACK BRAC | 2 |
| 45 | CZF09260 | 6MM L WASHER CAMTRACK CHAIN TENSIONER | 4 |
| *REPLACES CZF05111* | | | |
| 46 | CZH02907 | 10MM L WASHER 10X50 FLAT SIDE ZP | 2 |
| 47 | CZI02045 | 12MM L WASHER 39.5X12.5X12 | 2 |
| 48 | CZI02046 | 12MM L WASHER DOWEL | 2 |

## *Pick-up reel chassis flex [Camless] (978)*

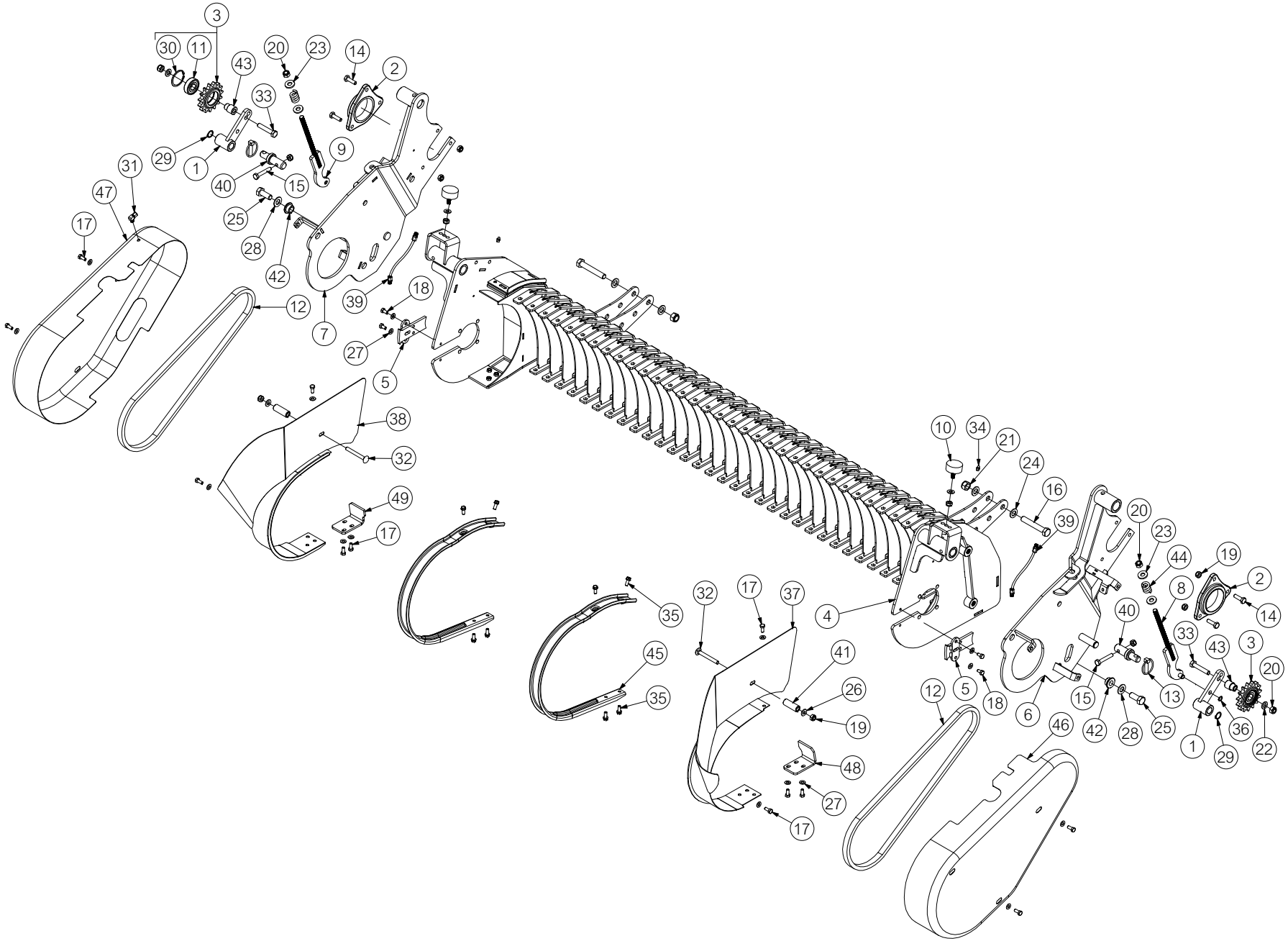

| No. | Part No | Description | Qty |
|---|---|---|---|
| 1 | ACH02939 | CHAIN TENSIONER ARM WELD ASSEM (FLEXI) | 2 |
| 2 | ALA00285 | REEL PIVOT BRACKET IGIDILUR | 2 |
| 3 | ALA00700 | TENSIONER SPROCKET ASSEMBLY V6 | 2 |
| *INCLUDES ITEMS 11 & 30* | | | |
| 4 | APU00015 | FLEXI CAMLESS REEL BACK WELD ASSEM | 1 |
| 5 | APU00017 | SIDE WALL COVER PLATE ( FLEXI ) | 2 |
| 6 | APU00018 | FLEXI SIDE WALL WELD ASSEM (LHS) | 1 |
| 7 | APU00019 | FLEXI SIDE WALL WELD ASSEM (RHS) | 1 |
| 8 | APU00020 | CHAIN TENSIONER ADJUSTER WELD ASSEM (FLEXI) | 1 |
| 9 | APU00021 | CHAIN ADJUSTER WELD ASSEM | 1 |
| 10 | CBE00002 | BUFFER RUBBER 50X21 M10X28 | 2 |
| 11 | CBR00066 | BEARING 6304 2RS | 2 |
| 12 | CCH00195 | CHAIN ASA60H 3/4 76 P INC JOINERLINK | 2 |
| *(IF AUGER SPROCKET IS 19T USE AS IS & IF AUGER SPROCKET IS 15T REMOVE 2 LINKS)* | | | |
| 13 | CFA00005 | LINCH PIN 10MM | 2 |
| 14 | CFA00016 | BOLT M10X35 | 6 |
| 15 | CFA00027 | BOLT M10X60 Z/P | 2 |
| 16 | CMH02848 | PIN CLEVIS 16X85 + DIA 4 C.HOLE | 2 |
| *REPLACES M16X90 BOLT CFA00040* | | | |
| 17 | CFA00052 | SETSCREW M8X20 Z/P | 16 |
| 18 | CFA00101 | SETSCREW M8X16 Z/P | 4 |
| 19 | CFA00123 | NUT M10 NYLOC | 12 |
| 20 | CFA00124 | NUT M12 NYLOC | 4 |
| 21 | CFA00450 | SPLIT PIN 4X36 ZP | 2 |
| *REPLACES M16 NYLOC NUT CFA00128* | | | |
| 22 | CFA00138 | WASHER FLAT 12MM Z/P | 2 |
| 23 | CFA00139 | WASHER FLAT 12MM H/D Z/P | 4 |
| 24 | CFA00140 | WASHER FLAT 16MM Z/P | 4 |
| 25 | CFA00151 | SETSCREW M16X40 Z/P | 2 |
| 26 | CFA00201 | WASHER FLAT 10 MM Z/P | 4 |
| 27 | CFA00249 | WASHER SKM8 | 20 |
| 28 | CFA00252 | WASHER SKM16 | 2 |
| 29 | CFA00339 | CIRCLIP 20MM EXTERNAL | 2 |
| 30 | CFA00461 | CIRCLIP 52MM INTERNAL DIN 472 | 2 |
| 31 | CFA00542 | OILER FITTING 90 DEG 1/8 BSP | 1 |
| *FITTING WITH NUT & OLIVE (USED ON FUSION ONLY)* | | | |
| 31 | CFA02253 | 90 DEG 1/8 4MM QUICK CONNECTOR | 1 |
| *PUSH-IN FITTING (USED ON F5 & V6 ONLY)* | | | |
| 32 | CFA00546 | BOLT M10X85 CUP HEAD SQ Z/P | 2 |
| 33 | CFA00579 | BOLT M12X65 ZP | 2 |
| 34 | CFA00590 | GREASE NIPPLE 1/8" BSP ST | 2 |
| 35 | CFA00766 | SETSCREW M8X20 FLANGED DIN6921 Z/P | 132 |
| 35a | CFA00764 | INSERT THREADED M8 (REEL) | 132 |
| *REPLACEMENT THREADED INSERTS FOR ITEM 4 (IF THREADING GETS DAMAGED)* | | | |
| 36 | CFA01053 | CIRCLIP 12MM EXTERNAL Z/P DIN 471 | 2 |
| 37 | CGD00375 | OUTER GUARD GRASS BAND LHS | 1 |
| 38 | CGD00376 | OUTER GUARD GRASS BAND RHS | 1 |
| 39 | CHY01096 | 6MM FLEXI CAMLESS GREASE PIPE ASSEM | 2 |
| 40 | CMH01035 | PIN 25X97 AND12MM CH (Z/P) | 2 |
| 41 | CMH02687 | BUSH 20 X 12 X 56 | 2 |

| No. | Part No | Description | Qty |
|---|---|---|---|
| 42 | CMH02713 | 35 X 25 STEPPED BUSH | 2 |
| 43 | CMH02744 | BUSH 34 X 25 STEPPED | 2 |
| 44 | CSG00297 | SPRING 6 X 25 X 35 | 2 |
| 45 | CTP00456 | BAND CAMLESS REEL | 33 |
| 46 | CTP00471 | FLEXI CAMLESS SIDE GUARD PRESSED ( DS ) | 1 |
| 47 | CTP00472 | FLEXI CAMLESS SIDE GUARD PRESSED ( NDS ) | 1 |
| 48 | CZF07108 | 6MM L DRUM CLEANER PLATE | 1 |
| 49 | CZF07109 | 6MM L DRUM CLEANER PLATE | 1 |

## Pick-up 3 (898)

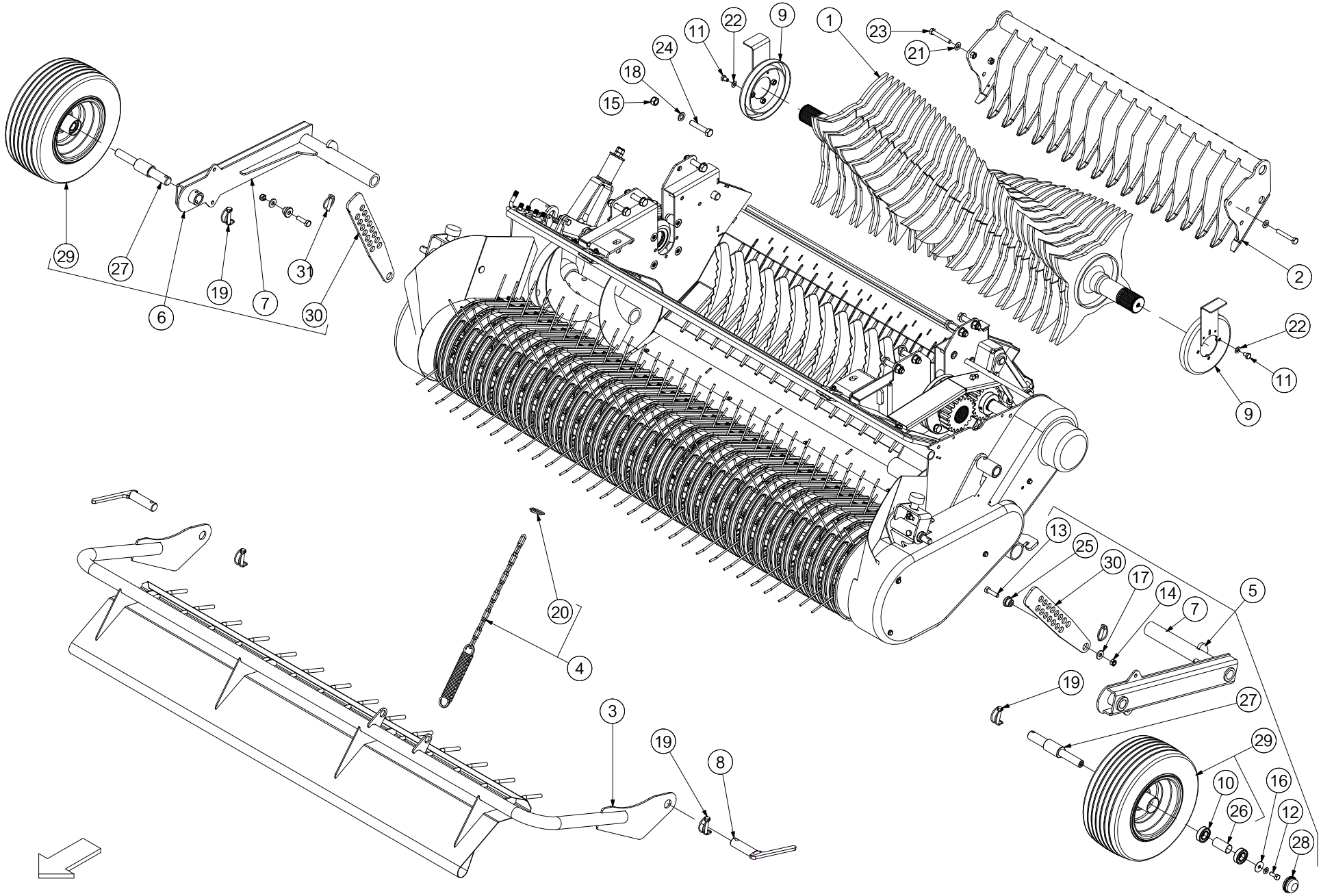
1
2
3
4
5
6
7
8
9
10
11
12
13
14
15
16
17
18
19
20
21
22
23
24
25
26
27
28
29
30
31

| No. | Part No | Description | Qty |
|---|---|---|---|
| 1 | ACH00573 | ROTOR 15 KNIFE WELD ASM Ø500MM | 1 |
| *USED ON F5000 UP TO SERIAL No 710801 & USED ON V660 UP TO SERIAL No 803232 (STANDARD FLOOR)* | | | |
| 1a | CZG02136 | 8MM L ROTOR PLATE (0-15 KNIFE) | 2 |
| *REPLACEMENT ROTOR FINGER PLATE (NOTE: THERE ARE 2 FINGER PLATES PER FLIGHT)* | | | |
| 1 | ACH01531 | ROTOR 15 KNIFE WELD ASM Ø540MM | 1 |
| *USED ON F5000 FROM SERIAL No 710802 & USED ON V660 FROM SERIAL No 803233 (SUSPENSION FLOOR)* | | | |
| 1a | CZG04740 | 8MM L ROTOR PLATE 540 OD | 2 |
| *REPLACEMENT ROTOR FINGER PLATE (NOTE: THERE ARE 2 FINGER PLATES PER FLIGHT)* | | | |
| 1 | ACH02958 | KOREA BIG ROTOR 2 STAR Ø540 HD 7K | 1 |
| *KOREAN (2 STAR ROTOR) MACHINES FROM SERIAL No 710802 ONWARDS (F5 SERIES) SUSPENSION FLOOR* | | | |
| 1 | ACH02933 | KOREAN ROTOR 2 STAR HEAVY DUTY 7K | 1 |
| *USED ON KOREAN (2 STAR ROTOR) MACHINES FROM SERIAL No 710461 TO 710801* | | | |
| 1 | ACH01353 | KOREAN ROTOR (12MM FINGERS) 2 STAR | 1 |
| *USED ON KOREAN (2 STAR ROTOR) MACHINES FROM SERIAL No 708408 TO 710460 (REPLACES ACH01089)* | | | |
| 2 | ACH00575 | 15 KNIFE COMB WELD ASM F5 | 1 |
| *STANDARD COMB USED IN MOST MARKETS* | | | |
| 2 | ACH01656 | COMB 15K F5 SERIES C/W CLEANING FINGERS | 1 |
| *CUSTOM COMB WITH ADDITIONAL CLEANING FINGERS FOR SPECIFIC MARKETS* | | | |
| 2 | ACH02935 | COMB F5000 KOREAN 2 STAR HD ROTOR 7K | 1 |
| *USED ON KOREAN FIXED CHAMBER MACHINES (F5000 FROM SERIAL No 710461)* | | | |
| 2 | ACH02619 | COMB ASSY KOREA (2 STAR ROTOR) | 1 |
| *KOREAN FIXED CHAMBER MACHINES (F5000 FROM SERIAL No 708408 TO 710460) REPLACES ACH02415* | | | |
| 3 | ACH01206 | GRASS GUARD CHOPPER UNIT F550 | 1 |
| 4 | ACN00042 | GRASS COVER SPRING ASSY | 1 |
| *INCLUDES ITEM 20* | | | |
| 5 | ADB00051 | PICKUP WHEEL COMP ASSY STD BALER | 1 |
| 6 | ADB00051 | PICKUP WHEEL COMP ASSY STD BALER | 1 |
| 7 | ADB00052 | PICKUP WHEEL ASSY ST BALER | 2 |
| 9 | ARC00182 | ROTOR SEAL RING ASSY (KOREA) M10 | 2 |
| 10 | CBR00009 | BEARING 6205 2RS | 4 |
| 11 | CFA00022 | SETSCREW M10X16 Z/P | 6 |
| 12 | CFA00031 | SETSCREW M12X25 Z/P | 2 |
| 13 | CFA00079 | BOLT M12X45 | 2 |
| 14 | CFA00124 | NUT M12 NYLOC | 2 |
| 15 | CFA00128 | NUT M16 NYLOC | 8 |
| 16 | CFA00250 | WASHER SKM12 | 2 |
| 16 | CFA00718 | WASHER MUDWING A13 Z/P | 2 |
| 16 | CFA00720 | WASHER FLAT M26 Z/P DIN126 | 2 |
| 17 | CFA00139 | WASHER FLAT 12MM H/D Z/P | 2 |
| 18 | CFA00140 | WASHER FLAT 16MM Z/P | 16 |
| 19 | CFA00194 | LINCH PIN PIPE 10MMX50MM | 4 |
| 20 | CFA00202 | LINCH PIN 6MM | 1 |
| 21 | CFA00250 | WASHER SKM12 | 4 |
| 22 | CFA00251 | WASHER SKM10 | 6 |
| 23 | CFA00777 | BOLT M12X80 GRADE 10.9 S/C | 4 |
| 24 | CFA00498 | BOLT M16 X 80 Z/P | 8 |
| 25 | CMH00771 | BUSH 12X35 STEPPED | 2 |
| 26 | CMH00838 | BUSH 27X30.25X62 REEL WHEEL | 2 |
| 27 | CMH00962 | PIN 30X200 STEPPED | 2 |
| 28 | CTP00070 | DUST CAP 170/60-8 VREDESTEIN | 2 |
| 29 | CWH00037 | WHEEL 170/60-8 V64+ 6PLY PICK-UP | 2 |

| No. | Part No | Description | Qty |
|---|---|---|---|
| *INCLUDES ITEMS 10 & 26* | | | |
| 30 | CZG04245 | 8MM L WHEEL GUIDE PART | 2 |
| 31 | CFA00005 | LINCH PIN 10MM | 2 |

## Pick-up 4 (896)

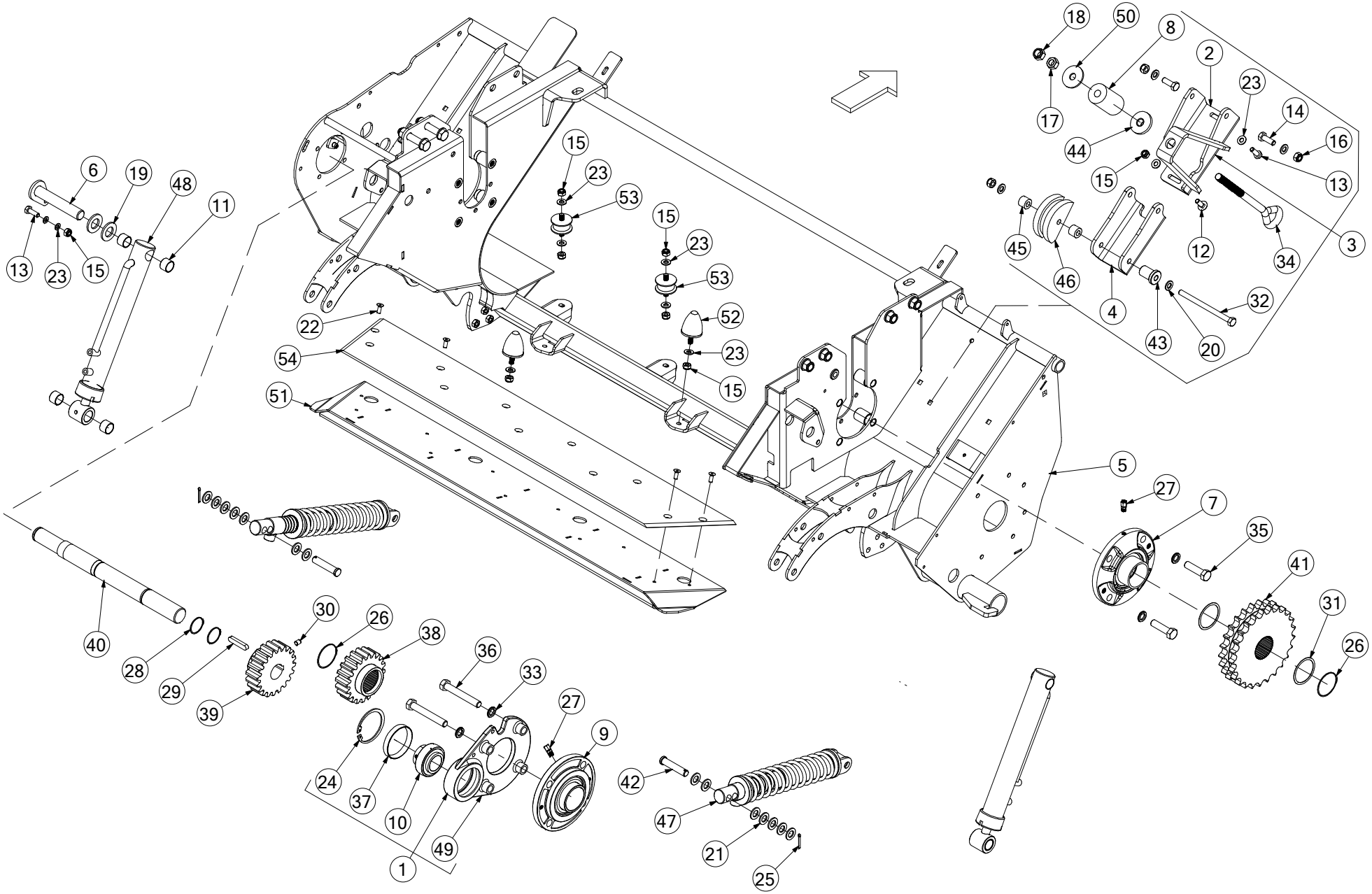
18
50
8
2
23
14
16
13
3
17
44
15
12
34
45
46
4
32
43
20
6
19
48
11
13
23
15
15
23
53
15
23
53
52
23
15
22
54
51
5
27
7
35
41
31
26
40
28
29
39
30
26
38
36
33
27
9
24
37
10
49
1
42
47
21
25

| No. | Part No | Description | Qty |
|---|---|---|---|
| 1 | ACH00331 | BEARING HOLDER ASSY | 1 |
| *INCLUDES ITEMS 10, 24, 37 & 49* | | | |
| 2 | ACH00864 | DUPLEX CHAIN TENSIONER BASE | 1 |
| 3 | ACH00865 | DUPLEX TENSIONER (SP | 1 |
| *COMPLETE ASSEMBLY (FUSION VARIO & BALERS ONLY) WITH BUFFER AS SHOWN* | | | |
| 3 | ACH01761 | DUPLEX CHAIN TENSIONER FUSION 3 | 1 |
| *COMPLETE ASSEMBLY (FUSION 3 SERIES ONLY) WITH EXTENSION SPRING NOT SHOWN* | | | |
| 4 | ACH02294 | DUPLEX TENSIONER WELD ASSY | 1 |
| 5 | ACH03043 | CHOPPER UNIT CHASSIS KIT | 1 |
| *USED WITH 25K SUSPENSION FLOOR FROM SERIAL No 662200 (FUSION 3), 710486 (F5), 802926 (V6) & 900300 (VARIO)* | | | |
| 5 | ACH03043 | CHOPPER UNIT CHASSIS KIT | 1 |
| *USED WITH 0K & 15K SUSPENSION FLOOR FROM SERIAL No 710802 (F5), 803233 (V6) & 900300 (VARIO)* | | | |
| 5 | ACH02311 | CHOPPER CHASSIS WELD STD FLOOR | 1 |
| *USED ON STD 25 KNIFE FLOOR UP TO SERIAL No 662199 (FUSION 3), 710485 (F5), 802925 (V6) & 900299 (VARIO)* | | | |
| 5 | ACH02311 | CHOPPER CHASSIS WELD STD FLOOR | 1 |
| *USED ON STD 0K & 15K FLOOR UP TO SERIAL No 710801 (F5), 803232 (V6) & 900299 (VARIO)* | | | |
| 5 | ACH01583 | CHOPPER CHASSIS FLEXI INTAKE WELD | 1 |
| *USED ON 0K & 15K SUSPN FROM SERIAL No 712563 (F5), 805370 (V6) & 900601 (VARIO)* | | | |
| 5 | ACH01583 | CHOPPER CHASSIS FLEXI INTAKE WELD | 1 |
| *USED ON 25K SUSPN FROM SERIAL No 664035 (FUS 3), 712593 (F5), 805384 (V6) & 900601 (VARIO)* | | | |
| 6 | ALA00247 | DROP FLOOR RAM PIN Z/P | 2 |
| 7 | ARC00067 | ROTOR BEARING HOUSING ASSY | 1 |
| 8 | KST00089 | DUPLEX CHAIN BUFFER KIT | 1 |
| *(REPLACES CBE00174) INCLUDES WASHERS (ITEM 50) COMPRESS BUFFER TO 85MM WHEN ADJUSTING DUPLEX CHAIN* | | | |
| 9 | CBR00078 | BEARING FEC 60 4 BOLT FLANGE | 1 |
| 10 | CBR00093 | BEARING INSERT INA GYE 40 KRRB | 1 |
| 11 | CBR00101 | BEARING GLACIER PM 2525 DX | 8 |
| 12 | CFA00017 | SETSCREW M10X30 CUP SQ Z/P | 1 |
| 13 | CFA00025 | SETSCREW M10X30 | 3 |
| 14 | CFA00033 | SETSCREW M12X35 Z/P | 2 |
| 15 | CFA00123 | NUT M10 NYLOC | 28 |
| 16 | CFA00124 | NUT M12 NYLOC | 3 |
| 17 | CFA00127 | NUT M16 | 1 |
| 18 | CFA00128 | NUT M16 NYLOC | 9 |
| 19 | CFA00135 | WASHER FLAT 1" Z/P | 4 |
| 20 | CFA00138 | WASHER FLAT 12MM Z/P | 4 |
| 21 | CFA00140 | WASHER FLAT 16MM Z/P | 16 |
| 22 | CFA00765 | SETSCREW M8X20 CSK Z/P | 11 |
| 23 | CFA00201 | WASHER FLAT 10 MM Z/P | 26 |
| 24 | CFA00232 | CIRCLIP 85MM INTERNAL | 1 |
| 25 | CFA00450 | SPLIT PIN 4 X36 Z/P | 2 |
| 26 | CFA00513 | CIRCLIP 60MM EXTERNAL | 2 |
| 27 | CFA00550 | ROTOR BEARING GREASE FITTING | 2 |
| 28 | CFA00551 | CIRCLIP 40MM EXTERNAL | 2 |
| 29 | CFA00558 | KEY 12X8X60 | 1 |
| 30 | CFA00559 | GRUBSCREW M10X12 | 1 |
| 31 | CFA00637 | SHIM 60X70X1 | 2 |
| 32 | CFA00747 | BOLT M12X170Z/P | 1 |
| 33 | CFA00783 | WASHER NL16 NORD-LOCK | 8 |
| 34 | CFA01048 | EYE BOLT M16X280 DACROMET | 1 |
| *REPLACES CFA00784* | | | |

| No. | Part No | Description | Qty |
|---|---|---|---|
| 35 | CFA00786 | BOLT M16X60 Z/P DIN931 GRADE 10.9 | 4 |
| 36 | CFA00787 | BOLT M16X100 Z/P DIN931 GRADE 10.9 | 4 |
| 37 | CMH00245 | BEARING RETAINER 1040 35MM | 1 |
| 38 | CMH00652 | GEAR SPUR MOD6 20 TOOTH SPLINE | 1 |
| 39 | CMH00653 | GEAR SPUR MOD6 20T 40MM ID | 1 |
| 40 | CMH00657 | SHAFT 40 X 480.5 STEPPED | 1 |
| 41 | CMH00659 | SPROCKET 1" PITCH 25 T DUPLEX | 1 |
| 42 | CMH00961 | PIN CLEVIS 16X80 & DIA 4 C.HOLE | 2 |
| 43 | CMH01022 | BUSH 8X35X45 STEPPED | 1 |
| 44 | CMH01910 | BUSH 17X70X10 STEPPED 25 | 1 |
| *REPLACES CMH01109, CZD05074 & CZD05186* | | | |
| 45 | CMH01110 | BUSH 12X25X19.5 | 2 |
| 46 | CPL00055 | CHAIN TENSIONER SLIDE 1"DUPLEX | 1 |
| 47 | CRA00186 | RAM PICKUP BALER | 2 |
| *USED WITH STD PICK-UP (CAN ALSO USE CRA00292 AS A DIRECT REPLACEMENT)* | | | |
| 47 | CRA00292 | RAM PICK UP REEL ( CAMLESS ) | 2 |
| *MUST BE USED WITH CAMLESS PICK-UP (CAN ALSO BE USED ON STD PICK-UP INSTEAD OF CRA00186)* | | | |
| 48 | CRA00193 | RAM CHOPPER FLOOR 20X40 BW | 2 |
| 49 | CTP00391 | BEARING HOLDER ASSY SPUR GEARS | 1 |
| *REPLACES ACH00330* | | | |
| 50 | CZD05074 | 4MM L WASHER 16X68X4 Z/P | 1 |
| *REPLACES CZD04321* | | | |
| 51 | ACH01587 | CHOPPER CHASSIS INTAKE PLATE | 1 |
| *USED ON 0K & 15K SUSPN FROM SERIAL No 712563 (F5), 805370 (V6) & 900601 (VARIO)* | | | |
| 51 | ACH01587 | CHOPPER CHASSIS INTAKE PLATE | 1 |
| *USED ON 25K SUSPN FROM SERIAL No 664035 (FUS 3), 712593 (F5), 805384 (V6) & 900601 (VARIO)* | | | |
| 52 | CBE00344 | BUFFER RUBBER 50X58 M10/28 68SH | 3 |
| 53 | CBE00345 | RUBBER BUFFER 50X26 M10 | 4 |
| 54 | CPL00242 | NYLON WEAR PLATE PICKUP ANGLED | 1 |
| *USED ON 0K & 15K SUSPN FROM SERIAL No 712563 (F5), 805370 (V6) & 900601 (VARIO)* | | | |
| 54 | CPL00242 | NYLON WEAR PLATE PICKUP ANGLED | 1 |
| *USED ON 25K SUSPN FROM SERIAL No 664035 (FUS 3), 712593 (F5), 805384 (V6) & 900601 (VARIO)* | | | |

## Pick-up 5 (897)

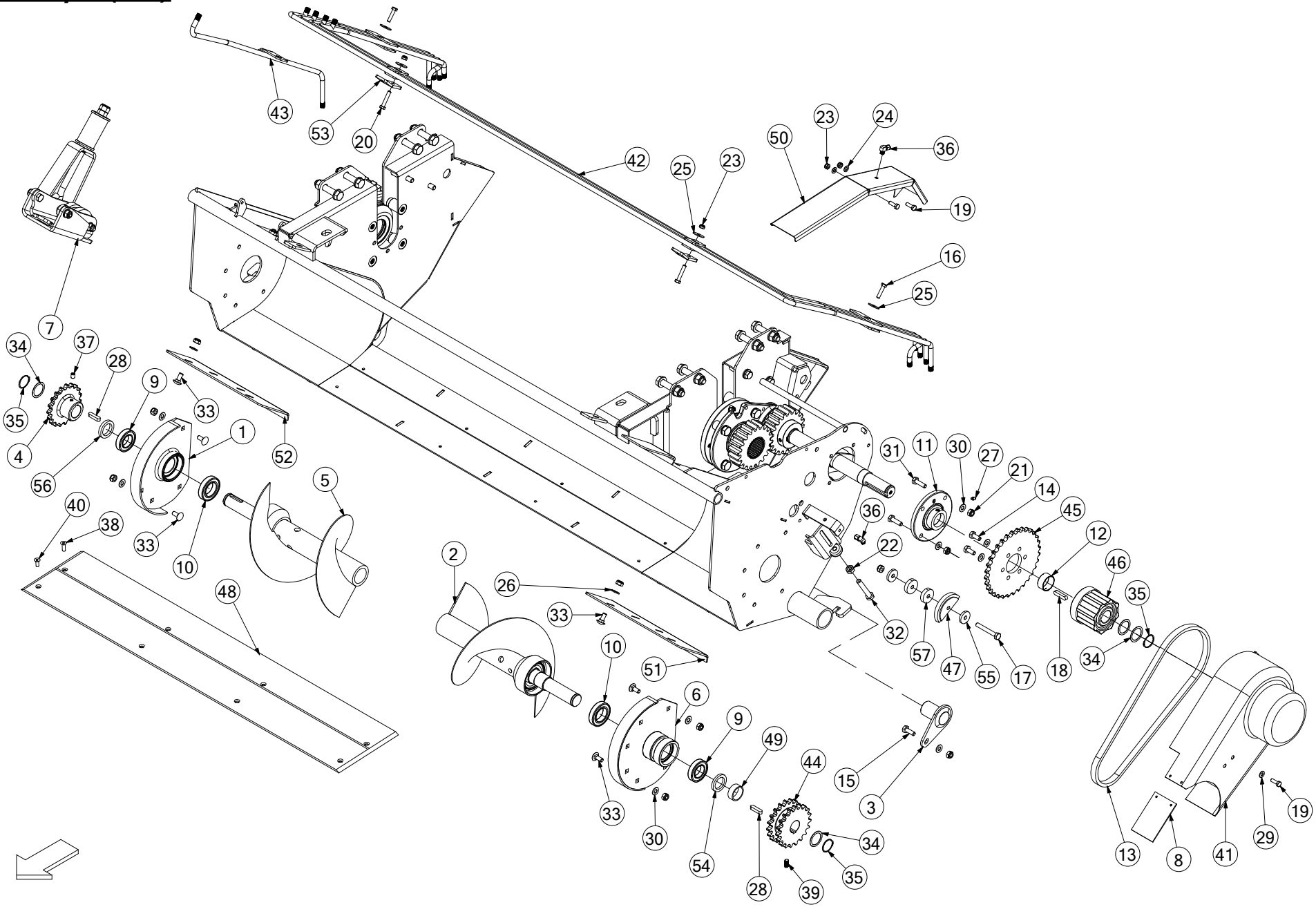
43
53
20
42
25
23
50
23
24
36
19
16
25
7
34
37
28
9
33
35
4
56
1
52
5
40
38
33
10
48
2
26
33
10
51
6
9
49
44
15
3
33
30
54
28
39
34
35
31
11
30
27
21
14
45
36
22
12
46
32
57
47
55
17
18
35
34
13
8
41
29
19

| No. | Part No | Description | Qty |
|---|---|---|---|
| 1 | CTP00503 | CHOPPER UNIT AUGER HOUSING RHS | 1 |
| 2 | ACH00314 | AUGER ASSY (LEFT) | 1 |
| | | *USED UP TO SERIAL No 662199 (FUSION 3), 710485 (F5), 802925 (V6) & 900299 (VARIO) - [STANDARD FLOOR]* | |
| 2 | ACH01458 | AUGER ASSY BIG (LEFT) | 1 |
| | | *USED FROM SERIAL No 662200 (FUSION 3), 710486 (F5), 802926 (V6) & 900300 (VARIO) - [SUSPENSION FLOOR]* | |
| 3 | ACH00321 | PIN CHOPPER FLOOR HINGE Z/P | 2 |
| 4 | ACH00326 | SPROCKET 19T AUGER ASM (RIGHT) | 1 |
| | | *USED UP TO SERIAL No 662199 (FUSION 3), 710485 (F5), 802925 (V6) & 900299 (VARIO) - [STANDARD FLOOR]* | |
| 4 | ARC00431 | SPROCKET 15T AUGER ASM (RIGHT) | 1 |
| | | *USED FROM SERIAL No 662200 (FUSION 3), 710486 (F5), 802926 (V6) & 900300 (VARIO) - [SUSPENSION FLOOR]* | |
| 5 | ACH00327 | AUGER ASSY (RIGHT) | 1 |
| | | *USED UP TO SERIAL No 662199 (FUSION 3), 710485 (F5), 802925 (V6) & 900299 (VARIO) - [STANDARD FLOOR]* | |
| 5 | ACH01456 | AUGER ASSY BIG (RIGHT) | 1 |
| | | *USED FROM SERIAL No 662200 (FUSION 3), 710486 (F5), 802926 (V6) & 900300 (VARIO) - [SUSPENSION FLOOR]* | |
| 6 | CTP00504 | CHOPPER UNIT AUGER HOUSING LHS | 1 |
| 7 | ACH00865 | DUPLEX TENSIONER (SPRING) | 1 |
| 8 | CBE00033 | RUBBER 120X80 CHAIN GUARD BALER | 1 |
| 9 | CBR00001 | BEARING 6007 2RS | 2 |
| 10 | CBR00076 | BEARING 6008 2RS | 2 |
| 11 | CBR00104 | BEARING INA TME 40 GE 40 KPPB3 | 1 |
| 12 | CBR00268 | BEARING GLACIER DU 4 | 1 |
| 13 | CCH02025 | CHAIN ASA60H 3/4 62 INC LINK | 1 |
| | | *(IF AUGER SPROCKET IS 19T USE AS IS & IF AUGER SPROCKET IS 15T REMOVE 2 LINKS)* | |
| 14 | CFA00024 | SETSCREW M10X25 Z/P | 6 |
| 15 | CFA00025 | SETSCREW M10X30 | 3 |
| 16 | CFA00055 | BOLT M8X35 Z/P | 2 |
| 17 | CFA00075 | BOLT M10X75 Z/P | 1 |
| 18 | CFA00081 | KEY 10X8X45 | 1 |
| 19 | CFA00102 | SETSCREW M8X25 Z/P | 3 |
| 20 | CFA00106 | BOLT M8X45 Z/P | 2 |
| 21 | CFA00123 | NUT M10 NYLOC | 28 |
| 22 | CFA00125 | NUT M12 Z/P | 1 |
| 23 | CFA00132 | NUT M8 NYLOC Z/P | 4 |
| 24 | CFA00147 | WASHER FLAT 8MM Z/P | 2 |
| 25 | CFA00149 | WASHER MUDWING M8 31.75OD | 4 |
| 26 | CFA00201 | WASHER FLAT 10 MM Z/P | 10 |
| 27 | CFA00217 | GREASE NIPPLE M6X1.0 ST | 1 |
| 28 | CFA00239 | KEY 10X8X40 | 2 |
| 29 | CFA00249 | WASHER SKM8 | 1 |
| 30 | CFA00251 | WASHER SKM10 | 24 |
| 31 | CFA00311 | SETSCREW M10X35 Z/P | 4 |
| 32 | CFA00330 | BOLT M12X80 Z/P | 1 |
| 33 | CFA00442 | SETSCREW M10X25 CUP SQ | 19 |
| 34 | CFA00512 | SHIM 35X45X1.0 Z/P | 4 |
| 35 | CFA00514 | CIRCLIP 35MM EXTERNAL | 3 |
| 36 | CFA00542 | OILER FITTING 90 DEG 1/8 BSP | 2 |
| 37 | CFA00559 | GRUBSCREW M10X12 | 1 |
| 38 | CFA00582 | SETSCREW M8X25 CSK ZP | 4 |
| 39 | CFA00625 | M10 x 20 GRUBSCREW | 1 |
| 40 | CFA00765 | SETSCREW M8X20 CSK ZP | 4 |

| No. | Part No | Description | Qty |
|---|---|---|---|
| 41 | CGD00057 | GUARD SLIPCLUTCH PICKUP REEL | 1 |
| 42 | CHY02606 | PIPE ASSY HYD CHOPPER UNIT | 1 |
| 43 | CHY02786 | STEEL PIPE WELD ASSY | 1 |
| | | *USED WITH SELECTABLE KNIFE CHOPPER UNITS ONLY* | |
| 44 | CMH00633 | SPROCKET 3/4" PITCH 19T DOUBLE | 1 |
| | | *USED UP TO SERIAL No 662199 (FUSION 3), 710485 (F5), 802925 (V6) & 900299 (VARIO) - [STANDARD FLOOR]* | |
| 44 | CMH00227 | SPROCKET 3/4"PITCH 15T DOUBLE | 1 |
| | | *USED FROM SERIAL No 662200 (FUSION 3), 710486 (F5), 802926 (V6) & 900300 (VARIO) - [SUSPENSION FLOOR]* | |
| 45 | CMH00727 | PLATEWHEEL 3/4" PITCH 32T | 1 |
| 46 | CMT00063 | CLUTCH STANDARD PICK-UP | 1 |
| | | *STANDARD PICK-UP* | |
| 46 | CMT00381 | CLUTCH CAMLESS (602175) EK34B | 1 |
| | | *CAMLESS PICK-UP* | |
| 46a | CMH02697 | CAMLESS CLUTCH RETAINING BUSH | 1 |
| | | *CAMLESS PICK-UP* | |
| 46b | CFA002319 | BOLT M10X30 SOC CAP 8.8 Z/P | 1 |
| | | *CAMLESS PICK-UP* | |
| 47 | CPL00043 | PLASTIC CHAIN TENSIONER (REEL) | 1 |
| 48 | CPL00087 | NYLON WEAR PLATE RECTANGULAR | 1 |
| | | *USED ON STD 0K & 15K FLOOR UP TO SERIAL No 710801 (F5), 803232 (V6) & 900299 (VARIO)* | |
| 48 | CPL00087 | NYLON WEAR PLATE RECTANGULAR | 1 |
| | | *USED ON STD 25 KNIFE FLOOR UP TO SERIAL No 662199 (FUSION 3), 710485 (F5), 802925 (V6) & 900299 (VARIO)* | |
| 48 | CPL00217 | NYLON WEAR PLATE PICKUP ANGLED | 1 |
| | | *USED ON 0K & 15K SUSPN ON SERIAL No 710802 - 711308 (F5), 803233 - 803695 (V6) & 900300 - 900412 (VARIO)* | |
| 48 | CPL00217 | NYLON WEAR PLATE PICKUP ANGLED | 1 |
| | | *25K SUSP ON SERIAL No 662200-663378 (FUS 3), 710486-711308 (F5), 802926-803695 (V6) & 900300-900421 (VARIO)* | |
| 48 | CPL00244 | NYLON WEAR PLATE PICKUP ANGLED | 1 |
| | | *USED ON 0K & 15K SUSPN ON SERIAL No 711309 - 712562 (F5), 803696 - 805369 (V6) & 900413 - 900600 (VARIO)* | |
| 48 | CPL00244 | NYLON WEAR PLATE PICKUP ANGLED | 1 |
| | | *25K SUSP ON SERIAL No 663379-664034 (FUS 3), 711309-712592 (F5), 803696-805383 (V6) & 900422-900600 (VARIO)* | |
| 48 | CPL00242 | NYLON WEAR PLATE PICKUP ANGLED | 1 |
| | | *USED ON 0K & 15K SUSPN FROM SERIAL No 712563 (F5), 805370 (V6) & 900601 (VARIO)* | |
| 48 | CPL00242 | NYLON WEAR PLATE PICKUP ANGLED | 1 |
| | | *USED ON 25K SUSPN FROM SERIAL No 664035 (FUS 3), 712593 (F5), 805384 (V6) & 900601 (VARIO)* | |
| 49 | CXT00185 | TUBE 42.4X3X16 | 1 |
| 50 | CZB02160 | 1.5MM L SPUR GEAR GUARD BALER | 1 |
| 51 | CZD02227 | 4MM L AUGER CLEANING PLATE LH | 1 |
| 52 | CZD04345 | 4MM L AUGER CLEANING PLATE RH | 1 |
| 53 | CZF02904 | 6MM L GUARD BRACKET BALER | 2 |
| 54 | CZF05110 | 6MM L SPACER | 1 |
| 55 | CZF09260 | 6MM L WASHER CAMTRACK CHAIN TENSIONER | 2 |
| 56 | CZG02115 | 8MM L AUGER SPACER | 1 |
| 57 | CZH02584 | 10MM L WASHER 40X10.5 Z/P | 2 |

## Pick-up drop floor [Up to Serial No 710801 (F5) 803232 (V6) 900299 (Vario)] (753)

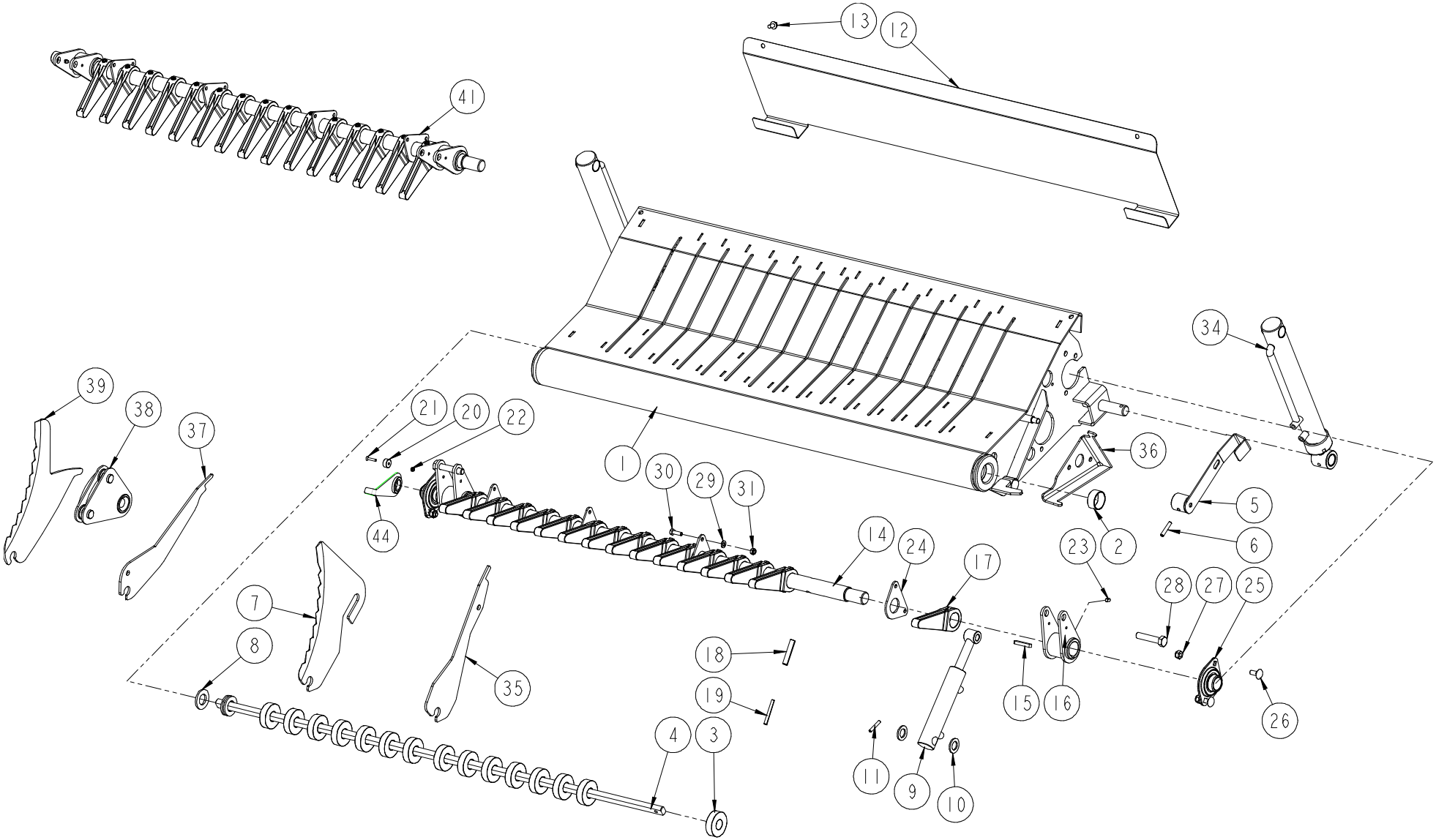

| No. | Part No | Description | Qty |
|---|---|---|---|
| 1 | ACH00572 | 15 KNIFE FLOOR WELD ASSY | 1 |
| *15K STANDARD FLOOR UP TO SERIAL No 710801 (F5), 803232 (V6) & 900299 (VARIO) REPLACED BY SUSPENSION FLR* | | | |
| 2 | CBR00268 | BEARING GLACIER DU 4 | 2 |
| 3 | CEL00154 | MAGNET 60 X24 X 17 | 15 |
| 4 | CMH00641 | SHAFT 22 X 1310 | 1 |
| 5 | ACH00323 | KNIFE RELEASE LEVER ASSY | 1 |
| 6 | CFA00009 | ROLL PIN 8X40 | 1 |
| 7 | CKN00014 | KNIFE CHOPPER UNIT | 15 |
| 7 | CKN00021 | KNIFE CHOPPER UNIT KOREAN | 7 |
| 8 | CFA00135 | WASHER FLAT 1" Z/P | 4 |
| 9 | CRA00185 | RAM KNIFE ACTUATION BW | 2 |
| 9 | CRA00713 | RAM KNIFE CHOPPING ADJ END | 1 |
| *ALTERNATIVE OPTION (TO CRA00185) WHICH ALLOWS ADJUSTMENT TO SET KNIFE CUTTING HEIGHT* | | | |
| 10 | CFA00413 | WASHER FLAT 20MM Z/P | 4 |
| 11 | CFA00073 | ROLL PIN 6X40 | 2 |
| 12 | CZB02203 | 1.5MM L GRASS GUARD CHOPPER F5 | 1 |
| 13 | CFA00519 | SETSCREW M8X16 FLD ZP | 2 |
| 14 | CMH01069 | SHAFT 35X1300 (15K BAR) | 1 |
| 15 | CFA00387 | KEY 8X7X50 | 2 |
| 16 | CTP00372 | KNIFE RAM ACTUATOR CAST | 2 |
| *REPLACES ACH02286* | | | |
| 17 | CTP00266 | KNIFE ACTUATOR ARM 35MM | 15 |
| 18 | CFA00504 | ROLL PIN 12X60 | 15 |
| 19 | CFA00642 | ROLL PIN 7X60 | 15 |
| 20 | CEL00059 | MAGNET 20 X 10 260369 | 1 |
| 21 | CFA00261 | SETSCREW M5X25 CSK HEX SS | 1 |
| 22 | CFA00348 | NUT M5 NYLOC SS | 1 |
| 23 | CFA00051 | GRUBSCREW M8X10 | 2 |
| 24 | CZD04279 | 4MM L KNIFE ARM LOCK BAR | 4 |
| 25 | CBR00072 | BEARING INA 2 BOLT RAE 30 NPPB | 2 |
| 26 | CFA00068 | BOLT M10X25 CUP SQ. Z/P | 4 |
| 27 | CFA00123 | NUT M10 NYLOC | 4 |
| 28 | CFA00547 | BOLT M14X70 Z/P | 2 |
| 29 | CFA00147 | WASHER FLAT 8MM Z/P | 16 |
| 30 | CFA00102 | SETSCREW M8X25 Z/P | 8 |
| 31 | CFA00132 | NUT M8 NYLOC Z/P | 8 |
| 32 | CFA00222 | WASHER FLAT 14MM Z/P | 8 |
| 33 | CFA00126 | NUT M14 NYLOC | 2 |
| 34 | CRA00193 | RAM CHOPPER FLOOR 20 | 2 |
| 35 | CZE00143 | 5MM L KNIFE BLANK BALER | 8 |
| 36 | CZD02356 | 4MM L LOCK BRACKET | 1 |
| *FOR GERMAN CHOPPER UNITS ONLY UP TO SERIAL No 710086 (ALSO ORDER 2x CFA00025, CFA00201 & CFA00123)* | | | |
| 37 | CZE00168 | 5MM L KNIFE BLANK | 8 |
| *FOR GERMAN CHOPPER UNITS ONLY UP TO SERIAL No 710086 (PRE 2016 MODELS ONLY)* | | | |
| 38 | ACN00055 | KNIFE HOLDER GERMAN 35MM | 15 |
| *FOR GERMAN CHOPPER UNITS ONLY UP TO SERIAL No 710086 (PRE 2016 MODELS ONLY)* | | | |
| 39 | CKN00016 | KNIFE FOR GERMAN DROP FLOOR | 15 |
| *FOR GERMAN CHOPPER UNITS ONLY UP TO SERIAL No 710086 (PRE 2016 MODELS ONLY)* | | | |
| 41 | ALA00203 | 15 KNIFE ARM COMP ASSY | 1 |
| *FOR STANDARD 15 KNIFE CHOPPER UNITS [Specify Machine type/Serial No + Year of manufacture when ordering this part]* | | | |

| No. | Part No | Description | Qty |
|---|---|---|---|
| 41 | ALA00281 | 15 KNIFE ARM COMP ASSY (GERMAN) | 1 |
| *FOR GERMAN 15 KNIFE CHOPPER UNITS UP TO SERIAL No 710086 (PRE 2016 MODELS ONLY) [Specify Type+Serial No]* | | | |
| 41 | ALA00661 | 7 KNIFE ARM COMP ASSY (KOREAN) | 1 |
| *FOR KOREAN 7 KNIFE CHOPPER UNITS [Specify Machine type/Serial No + Year of manufacture when ordering this part]* | | | |
| 44 | ACN00089 | KNIFE MAGNET LEVER ASSY | 1 |
| 44a | CFA00402 | CIRCLIP 30MM EXTERNAL ZP | 1 |
| 44b | CFA00883 | KEY 8X7X20 | 1 |

## Pick-up drop floor suspension (971)

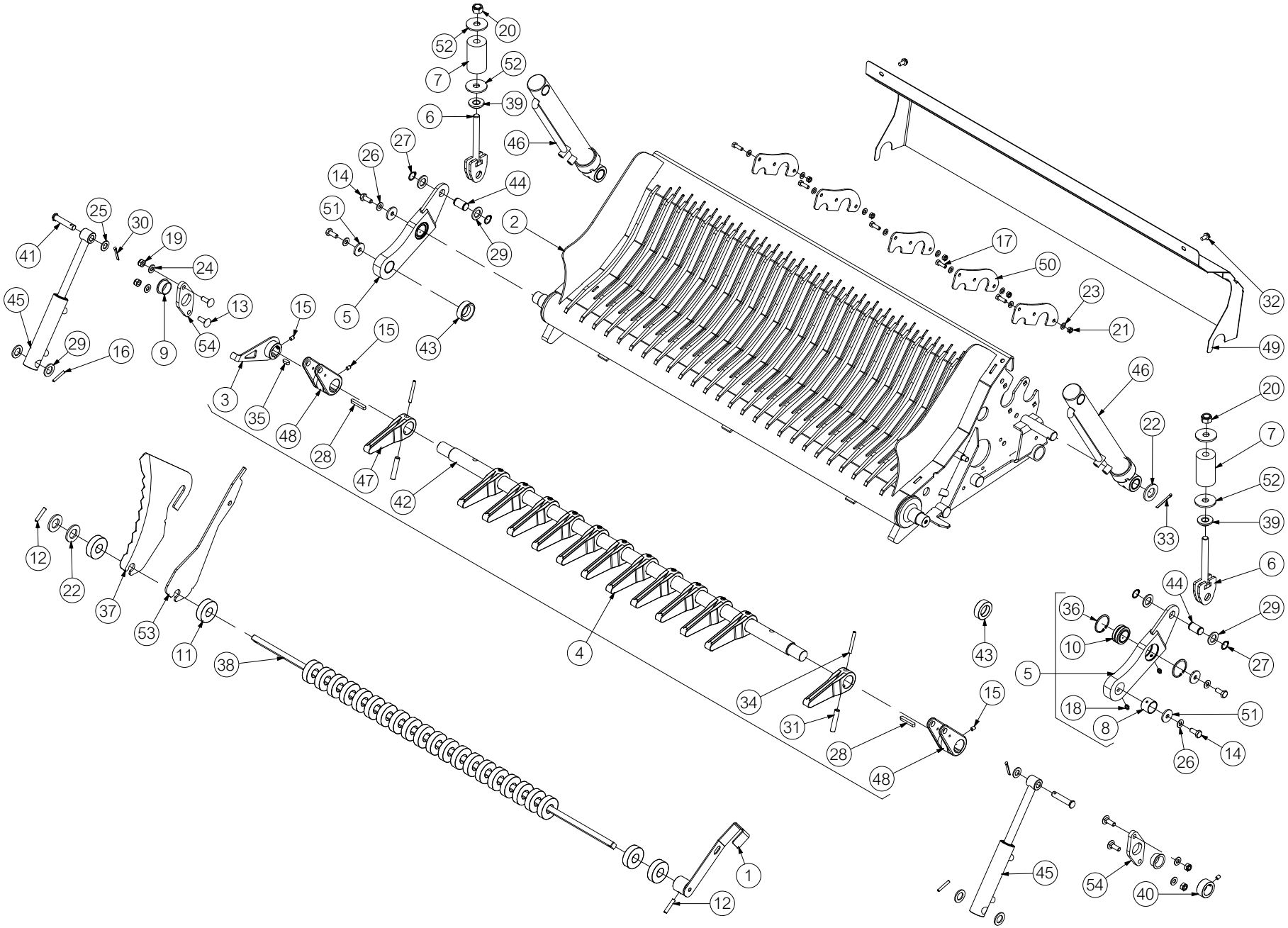

| No. | Part No | Description | Qty |
|---|---|---|---|
| 1 | ACH00323 | KNIFE RELEASE LEVER ASSY | 1 |
| 2 | ACH01607 | SUSPENSION FLOOR WELD 25K BIG ROTOR | 1 |
| *25K SUSPENSION FLOOR FROM SERIAL No 662200 (FUSION 3), 710486 (F5), 802926 (V6) & 900300 (VARIO)* | | | |
| 2 | ACH03015 | SUSPENSION FLOOR 15K WELD ASM BIG ROTOR | 1 |
| *15K SUSPENSION FLOOR FROM SERIAL No 710802 (F5), 803233 (V6) & 900300 (VARIO)* | | | |
| 3 | CTP00553 | SENSOR READOUT KNIFE ARM | 1 |
| *REPLACES ACN00147* | | | |
| 4 | ALA00790 | 25 KNIFE BAR COMP ASM BIG ROTOR | 1 |
| 4 | ALA00822 | 15 KNIFE ARM COMP ASM BIG ROTOR | 1 |
| 5 | ALA00789 | LINK ARM ASSY DROP FLOOR | 2 |
| *REPLACES ALA00751* | | | |
| 6 | CTP00536 | FLOOR SUSPENSION SPRING TENSIONER BRCKT | 2 |
| *REPLACES ALA00754 WHICH CAN ALSO BE USED* | | | |
| 7 | KST00089 | DUPLEX CHAIN BUFFER KIT | 2 |
| *80MM INSTALLATION LENGTH (INCLUDES 1x CBE00340 & 2x ITEM 52)* | | | |
| 8 | CBR00007 | BEARING GLACIER PM 3025 DX | 2 |
| 9 | CBR00068 | BEARING 30X34X16 STEPPED PLASTIC | 2 |
| 10 | CBR00127 | BEARING SPHERICAL 30MM GE30ES 2RS | 2 |
| 11 | CEL00154 | MAGNET 60 X24 X 17 | 25 |
| 12 | CFA00009 | ROLL PIN 8X40 | 2 |
| 13 | CFA00017 | SETSCREW M10X30 CUP SQ Z/P | 4 |
| 14 | CFA00024 | SETSCREW M10X25 Z/P | 4 |
| 15 | CFA00051 | GRUBSCREW M8X10 | 4 |
| 16 | CFA00073 | ROLL PIN 6X40 | 2 |
| 17 | CFA00102 | SETSCREW M8X25 Z/P | 15 |
| 18 | CFA00118 | GREASE NIPPLE M8X1.25 STRAIGHT | 4 |
| 19 | CFA00123 | NUT M10 NYLOC | 4 |
| 20 | CFA00128 | NUT M16 NYLOC | 2 |
| 21 | CFA00132 | NUT M8 NYLOC Z/P | 16 |
| 22 | CFA00135 | WASHER FLAT 1" Z/P | 4 |
| 23 | CFA00147 | WASHER FLAT 8MM Z/P | 30 |
| 24 | CFA00201 | WASHER FLAT 10 MM Z/P | 4 |
| 25 | CFA00222 | WASHER FLAT 14MM Z/P | 2 |
| 26 | CFA00251 | WASHER SKM10 | 4 |
| 27 | CFA00339 | CIRCLIP 20MM EXTERNAL | 4 |
| 28 | CFA00387 | KEY 8X7X50 | 2 |
| 29 | CFA00413 | WASHER FLAT 20MM Z/P | 8 |
| 30 | CFA00475 | SPLIT PIN 5X40 Z/P | 2 |
| 31 | CFA00504 | ROLL PIN 12X60 ZP | 25 |
| 32 | CFA00519 | SETSCREW M8X16 FLD ZP | 2 |
| 33 | CFA00556 | SPLIT PIN 6X50 Z/P | 2 |
| 34 | CFA00642 | ROLL PIN M7X60 | 25 |
| 35 | CFA00949 | KEY 8X7X10 | 1 |
| 36 | CFA01083 | CIRCLIP 50MM INTERNAL | 4 |
| 37 | CKN00014 | KNIFE CHOPPER UNIT STD (LONG) | 25 |
| 38 | CMH00641 | SHAFT 22 X 1310 | 1 |
| 39 | CMH01109 | WASHER 17X40X12 Z/P | 2 |
| 40 | CMH01314 | BUSH 30X45X20 | 1 |
| 41 | CMH01483 | PIN 14 X 70 Z/P | 2 |
| 42 | CMH01477 | SHAFT 35X1315 (25 K BAR) | 1 |

| No. | Part No | Description | Qty |
|---|---|---|---|
| 42 | CMH01731 | SHAFT 35X1320 SUSP FLOOR (15K BAR) | 1 |
| 43 | CMH01656 | BUSH 30X50X16 Z/P | 2 |
| 44 | CMH01711 | PIN 20X36 Z/P | 2 |
| 45 | CRA00185 | RAM KNIFE ACTUATION BW | 2 |
| 46 | CRA00193 | RAM CHOPPER FLOOR 20X40 BW | 2 |
| 47 | CTP00266 | KNIFE ACTUATOR ARM | 25 |
| *REPLACES ACH02267* | | | |
| 48 | CTP00372 | KNIFE RAM ACTUATOR | 2 |
| 49 | CZB00380 | 1.5MM D-FLOOR GUARD FUS3 & F5 | 1 |
| *USED ON FUSION 3 UP TO SERIAL No 664000 & F5 MACHINES UP TO SERIAL No 712266* | | | |
| 49 | CZB00382 | 1.5MM SUSPENSION DROP FLOOR GUARD | 1 |
| *USED ON FUSION 3 FROM SERIAL No 664001 & F5 MACHINES FROM SERIAL No 712267* | | | |
| 49 | AGD00002 | DROP FLOOR GUARD V6 & VARIO | 1 |
| 50 | CZD02628 | 4MM L DROP FLOOR PART | 5 |
| 51 | CZD02959 | WASHER 10X40X4 | 4 |
| 52 | CZD05074 | 4MM L WASHER 16X68X4 | 4 |
| 53 | CZE00306 | 5MM L KNIFE BLANK (BIG ROTOR) | 1 |
| 54 | CZH03537 | 10MM L SHAFT BUSH BRACKET | 2 |

# Pick-up drop floor select (803)

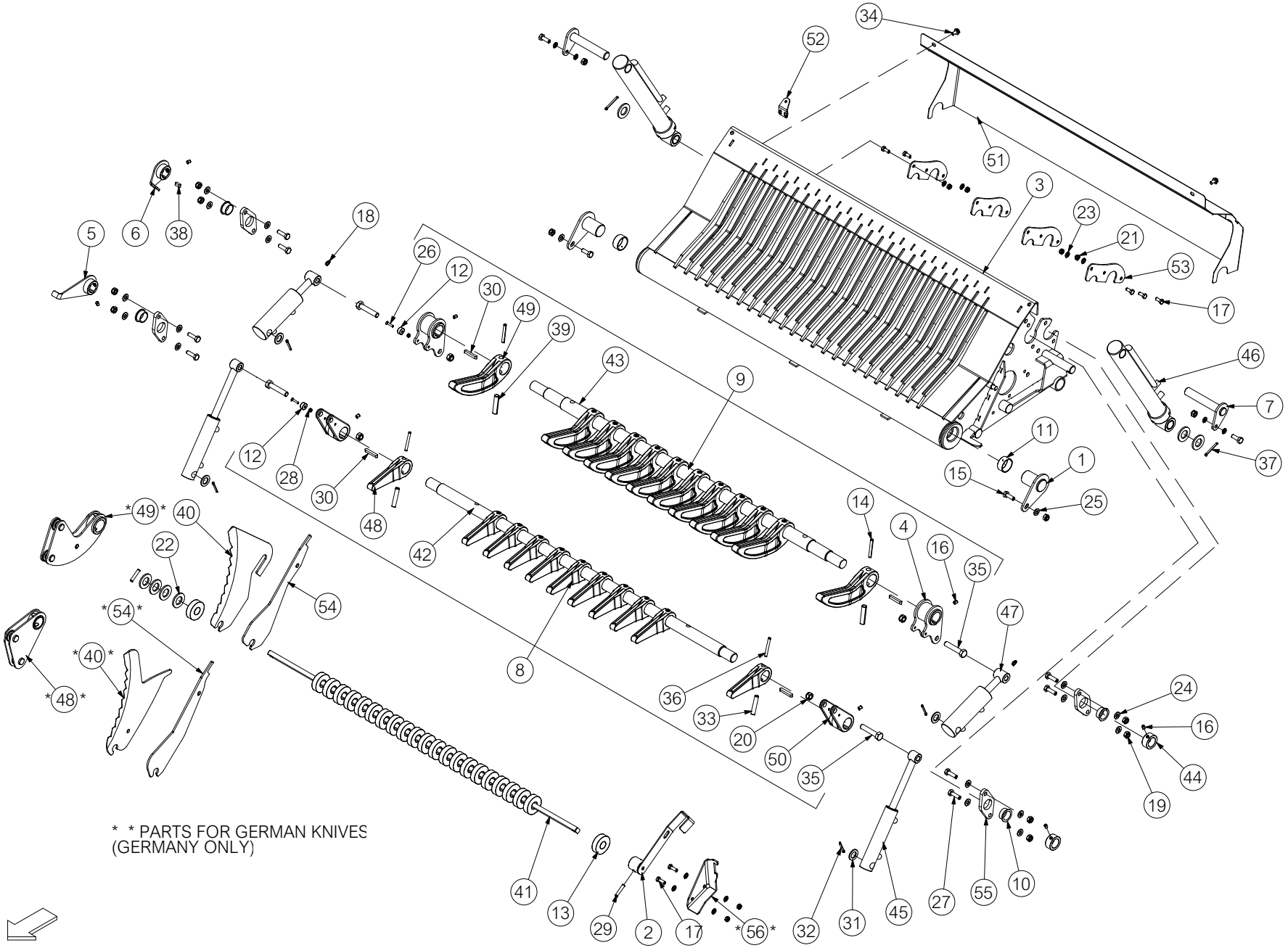

| No. | Part No | Description | Qty |
|---|---|---|---|
| 1 | ACH00321 | PIN CHOPPER FLOOR HINGE Z/P | 2 |
| 2 | ACH00323 | KNIFE RELEASE LEVER ASSY | 1 |
| 3 | ACH01337 | DROP FLOOR WELD ASM 25K SELECT | 1 |
| *25K FLOOR USED UP TO SERIAL No 662199 (FUSION 3), 710485 (F5), 802925 (V6) & 900299 (VARIO)* | | | |
| 3 | ACH01093 | DROP FLOOR WELD ASM 23K SELECT | 1 |
| *23K FLOOR USED UP TO SERIAL No 656828 (FUSION 3), 708117 (F5) & 801429 (V6) - [REPLACED BY 25K STD FLOOR]* | | | |
| 3 | ACH01113 | DROP FLOOR WELD ASM 15K SELECT | 1 |
| *15K FLOOR USED UP TO SERIAL No 710801 (F5), 803232 (V6) & 900299 (VARIO) - [REPLACED BY SUSPENSION FLOOR]* | | | |
| 4 | ACH01096 | KNIFE ACTUATOR SELECT KNIFE | 2 |
| 5 | ACN00147 | KNIFE ARM SELECTABLE FLOOR | 1 |
| *FROM SERIAL NO 656829/708243/801354 FOR FUSION/F5/V6 (REPLACES ACN00089)* | | | |
| 6 | ACN00127 | KNIFE LEVER ARM SELECTABLE FLOOR | 1 |
| *FROM SERIAL NO 656829/708243/801354 FOR FUSION 3/F5/V6* | | | |
| 7 | ALA00247 | DROP FLOOR RAM PIN Z/P | 2 |
| 8 | ALA00577 | 25K SELECT KNIFE ARM 1 ASSY | 1 |
| 8 | ALA00436 | 23K SELECT KNIFE ARM 1 ASSY | 1 |
| 8 | ALA00460 | 15K SELECT KNIFE ARM 1 ASSY | 1 |
| 8 | ALA00630 | 25K GERMAN SELECT ARM 1 ASSY | 1 |
| ** * GERMAN KNIVES ONLY (25K ARM ASM) UP TO SERIAL No 659804 (FUS 3), 710086 (F5), 802638 (V6) & 900171 (VARIO)* | | | |
| 8 | ALA00488 | 23K GERMAN SELECT FRONT ARM ASSY | 1 |
| ** * GERMAN KNIVES (23 KNIFE) COMPLETE ARM ASM (GERMANY) PRE 2014 MODELS ONLY* | | | |
| 8 | ALA00466 | 15K GERMAN SELECT ARM 1 ASSY | 1 |
| ** * GERMAN KNIVES ONLY (15K ARM ASM) UP TO SERIAL No 659804 (FUS 3), 710086 (F5), 802638 (V6) & 900171 (VARIO)* | | | |
| 9 | ALA00437 | 23-25K SELECT KNIFE ARM 2 ASSY | 1 |
| 9 | ALA00461 | 15K SELECT KNIFE ARM 2 ASSY | 1 |
| 9 | ALA00489 | 23-25K GERMAN SELECT ARM 2 ASSY | 1 |
| ** * GERMAN KNIVES (23 OR 25K ARM ASM) UP TO SERIAL No 659804 (FUS 3), 710086 (F5), 802638 (V6) & 900171 (VARIO)* | | | |
| 9 | ALA00465 | 15K GERMAN SELECT KNIFE ARM 2 ASSY | 1 |
| ** * GERMAN KNIVES ONLY (15K ARM ASM) UP TO SERIAL No 659804 (FUS 3), 710086 (F5), 802638 (V6) & 900171 (VARIO)* | | | |
| 10 | CBR00068 | BEARING 30X34X16 STEPPED PLAS | 4 |
| 11 | CBR00268 | BEARING GLACIER DU 4 | 2 |
| 12 | CEL00059 | MAGNET 20 X 10 260369 | 2 |
| *UP TO SERIAL NO 656828/708242/801353 FOR FUSION 3/F5/V6* | | | |
| 13 | CEL00154 | MAGNET 60 X24 X 17 | 25 |
| 14 | CFA00642 | ROLL PIN 7X60 ZP | 12 |
| *UP TO SERIAL NO 657563/708623/801687 FOR FUSION 3/F5/V6* | | | |
| 14 | CFA00011 | ROLL PIN 8X60 DIN 1481 | 12 |
| *FROM SERIAL NO 657564/708624/801688 FOR FUSION 3/F5/V6* | | | |
| 15 | CFA00025 | SETSCREW M10X30 | 4 |
| 16 | CFA00051 | GRUBSCREW M8X10 | 8 |
| 17 | CFA00102 | SETSCREW M8X25 Z/P | 17 |
| 18 | CFA00118 | GREASE NIPPLE M8X1.25 STRAIGHT | 2 |
| 19 | CFA00123 | NUT M10 NYLOC | 12 |
| 20 | CFA00126 | NUT M14 NYLOC | 4 |
| 21 | CFA00132 | NUT M8 NYLOC Z/P | 17 |
| 22 | CFA00135 | WASHER FLAT 1" Z/P | 8 |
| 23 | CFA00147 | WASHER FLAT 8MM Z/P | 19 |
| 24 | CFA00201 | WASHER FLAT 10 MM Z/P | 16 |
| 25 | CFA00251 | WASHER SKM10 | 2 |
| 26 | CFA00261 | SETSCREW M5X25 CSK HEX SS | 2 |
| 27 | CFA00311 | SETSCREW M10X35 Z/P | 8 |

| No. | Part No | Description | Qty |
|---|---|---|---|
| 28 | CFA00348 | NUT M5 NYLOC SS | 2 |
| 29 | CFA00380 | ROLL PIN 8X40 Z/P | 2 |
| 30 | CFA00387 | KEY 8X7X50 | 4 |
| 31 | CFA00413 | WASHER FLAT 20MM Z/P | 4 |
| 32 | CFA00475 | SPLIT PIN 5X40 Z/P | 4 |
| 33 | CFA00504 | ROLL PIN 12X60 ZP | 13 |
| 34 | CFA00519 | SETSCREW M8X16 FLD ZP | 2 |
| 35 | CFA00547 | BOLT M14X70 Z/P | 4 |
| 36 | CFA00642 | ROLL PIN M7X60 | 13 |
| 37 | CFA00669 | SPLIT PIN 8X50 Z/P | 2 |
| 38 | CFA00883 | KEY 8X7X20 | 1 |
| 39 | CFA00504 | ROLL PIN 12X60 ZP | 12 |
| *UP TO SERIAL NO 657563/708623/801687 FOR FUSION 3/F5/V6* | | | |
| 39 | CFA01009 | ROLL PIN 14 X 60 Z/P DIN 1481 | 12 |
| *FROM SERIAL NO 657564/708624/801688 FOR FUSION 3/F5/V6* | | | |
| 40 | CKN00014 | KNIFE CHOPPER UNIT STANDARD | 25 |
| 40 | CKN00016 | KNIFE FOR FLOOR (GERMANY ONLY) | 25 |
| *** GERMAN KNIVES ONLY - UP TO SERIAL No 659804 (FUSION 3), 710086 (F5 SERIES), 802638 (V6) & 900171 (VARIO)* | | | |
| 41 | CMH00641 | SHAFT 22 X 1310 MAGNET | 1 |
| 42 | CMH01496 | SHAFT 35X1320 (25 KNIFE SELECT) | 1 |
| 42 | CMH01225 | SHAFT 35X1300 (23 KNIFE SELECT) | 1 |
| 42 | CMH01069 | SHAFT 35X1300 (15 KNIFE SELECT) | 1 |
| 43 | CMH01308 | SHAFT 40X1320 23-25 KNIFE SELECT | 1 |
| 43 | CMH01358 | SHAFT 40X1305 15 KNIFE SELECT | 1 |
| 44 | CMH01314 | BUSH 30X45X20 | 2 |
| 45 | CRA00185 | RAM KNIFE ACTUATION BW | 2 |
| 46 | CRA00193 | RAM CHOPPER FLOOR 20X40 BW | 2 |
| 47 | CRA00637 | RAM 45X20 SELECT KNIFE | 2 |
| 48 | CTP00266 | KNIFE ACTUATOR ARM STANDARD | 13 |
| 48 | ACN00055 | KNIFE HOLDER GERMAN 12MM HOLE | 13 |
| *** GERMAN KNIVES ONLY - UP TO SERIAL No 659804 (FUSION 3), 710086 (F5 SERIES), 802638 (V6) & 900171 (VARIO)* | | | |
| 49 | CTP00360 | KNIFE ARM SELECTABLE STANDARD | 12 |
| *STANDARD KNIVES (MUST ALSO ORDER LARGER ROLL PINS CFA00011 & CFA01009)* | | | |
| 49 | ALA00467 | KNIFE ARM ASSY SELECT GERMAN | 12 |
| ** * GERMAN KNIVES PRE 2016 MODELS ONLY (MUST ALSO ORDER LARGER ROLL PINS CFA00011 & CFA01009)* | | | |
| 50 | CTP00372 | KNIFE RAM ACTUATOR | 2 |
| 51 | CZB00380 | 1.5MM D-FLOOR GUARD FUS3 & F5 | 1 |
| 51 | AGD00002 | DROP FLOOR GUARD V6 & VARIO | 1 |
| 52 | CZC04421 | 3MM L DROP FLOOR MAGNET BRACKET F5500 ONLY | 1 |
| 53 | CZD02628 | 4MM L DROP FLOOR PART | 5 |
| 54 | CZE00143 | 5MM L KNIFE BLANK BLR STANDARD | 1 |
| 54 | CZE00168 | 5MM KNIFE BLANK (GERMANY ONLY) | 1 |
| 55 | CZH03537 | 10MM L SHAFT BUSH BRACKET | 4 |
| 56 | CZD02647 | 4MM GERMAN KNIFE LOCK BRACKET | 1 |
| *** GERMAN KNIVES ONLY - UP TO SERIAL No 659804 (FUSION 3), 710086 (F5 SERIES), 802638 (V6) & 900171 (VARIO)* | | | |

## Pick-up drop floor suspension select (976)

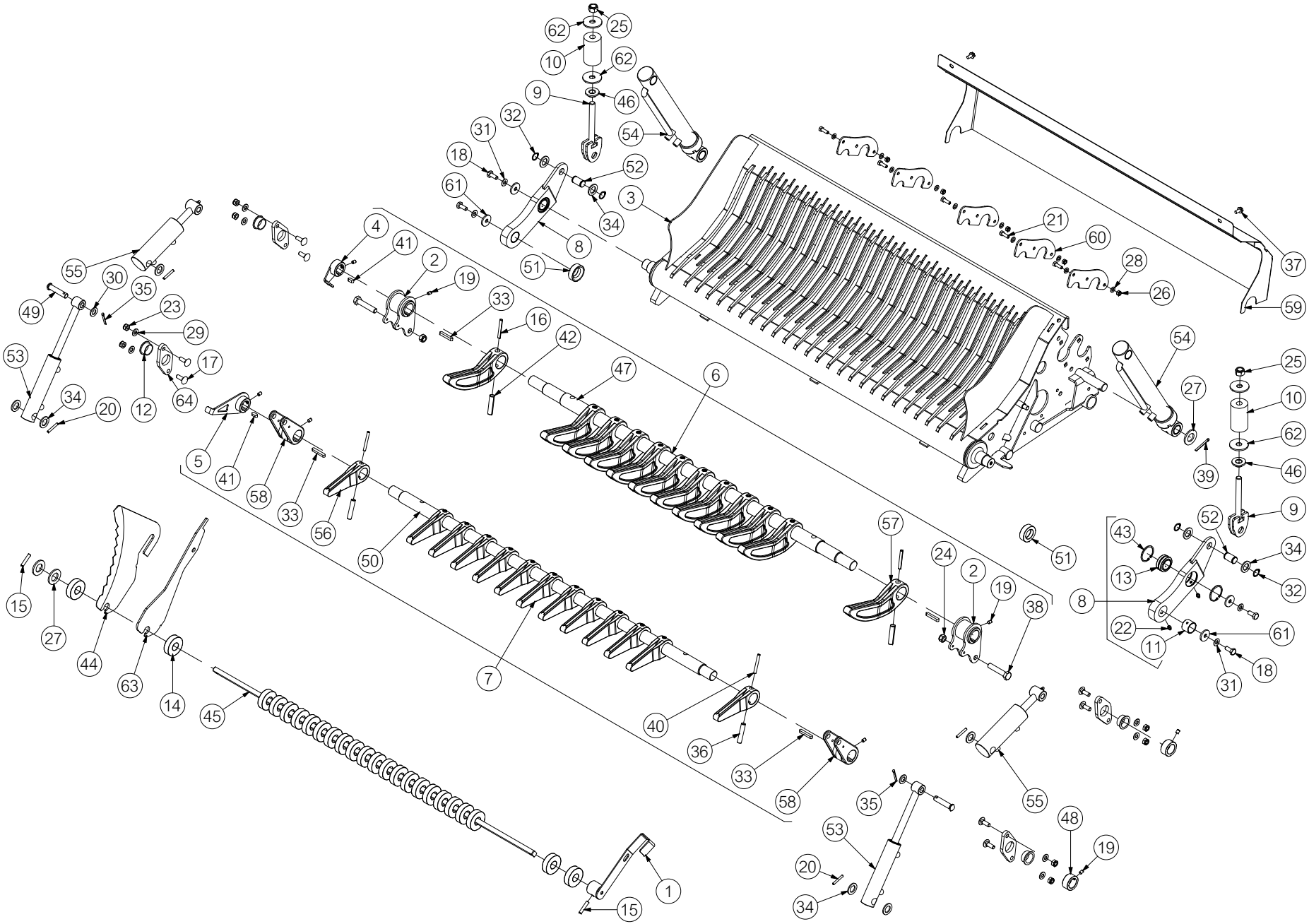

| No. | Part No | Description | Qty |
|---|---|---|---|
| 1 | ACH00323 | KNIFE RELEASE LEVER ASSY | 1 |
| 2 | ACH01096 | KNIFE ACTUATOR SELECT KNIFE | 2 |
| 3 | ACH01607 | SUSPENSION FLOOR WELD 25K BIG ROTOR<br>*25K SUSPENSION FLOOR FROM SERIAL No 662200 (FUSION 3), 710486 (F5), 802926 (V6) & 900300 (VARIO)* | 1 |
| 3 | ACH03015 | SUSPENSION FLOOR 15K WELD ASM BIG ROTOR<br>*15K SUSPENSION FLOOR FROM SERIAL No 710802 (F5), 803233 (V6) & 900300 (VARIO)* | 1 |
| 4 | ACN00127 | KNIFE LEVER ARM SELECTABLE FLOOR<br>*USED UP TO SERIAL No 664000 (FUSION 3), 712266 (F5), 805179 (V6) & 900518 (VARIO)* | 1 |
| 4 | ACN00181 | SENSOR TARGET BRACKET SELECT KNIFE<br>*USED FROM SERIAL No 664001 (FUSION 3), 712267 (F5), 805180 (V6) & 900519 (VARIO)* | 1 |
| 5 | CTP00553 | SENSOR READOUT KNIFE ARM<br>*REPLACES ACN00147* | 1 |
| 6 | ALA00437 | 23-25K SELECT KNIFE ARM 2 ASSY<br>*USED UP TO SERIAL No 664000 (FUSION 3), 712266 (F5), 805179 (V6) & 900518 (VARIO)* | 1 |
| 6 | ALA00923 | 25K SELECT KNIFE ARM 2 ASSY<br>*USED FROM SERIAL No 664001 (FUSION 3), 712267 (F5), 805180 (V6) & 900519 (VARIO)* | 1 |
| 6 | ALA00832 | 15K SELECT KNIFE ARM 2 ASSY BIG ROTOR<br>*USED UP TO SERIAL No 712266 (F5), 805179 (V6) & 900518 (VARIO)* | 1 |
| 6 | ALA00924 | 15K SELECT KNIFE ARM 2 ASSY BIG ROTOR<br>*USED FROM SERIAL No 712267 (F5), 805180 (V6) & 900519 (VARIO)* | 1 |
| 7 | ALA00577 | 25K SELECT KNIFE ARM 1 ASSY | 1 |
| 7 | ALA00831 | 15 KNIFE ARM 1 SEL FLOOR BIG ROTOR | 1 |
| 8 | ALA00789 | SUSPENSION ARM DROP FLOOR<br>*REPLACES ALA00751* | 2 |
| 9 | CTP00536 | FLOOR SUSPENSION SPRING TENSIONER BRCKT<br>*REPLACES ALA00754 WHICH CAN ALSO BE USED* | 2 |
| 10 | KST00089 | DUPLEX CHAIN BUFFER KIT<br>*80MM INSTALLATION LENGTH (INCLUDES 1x CBE00340 & 2x ITEM 62)* | 2 |
| 11 | CBR00007 | BEARING GLACIER PM 3025 DX | 2 |
| 12 | CBR00068 | BEARING 30X34X16 STEPPED PLASTIC | 4 |
| 13 | CBR00127 | BEARING SPHERICAL 30MM GE30ES 2RS | 2 |
| 14 | CEL00154 | MAGNET 60 X24 X 17 | 25 |
| 15 | CFA00009 | ROLL PIN 8X40 | 2 |
| 16 | CFA00011 | ROLL PIN 8X60 | 12 |
| 17 | CFA00017 | SETSCREW M10X30 CUP SQ Z/P | 8 |
| 18 | CFA00024 | SETSCREW M10X25 Z/P | 4 |
| 19 | CFA00051 | GRUBSCREW M8X10 | 8 |
| 20 | CFA00073 | ROLL PIN 6X40 | 4 |
| 21 | CFA00102 | SETSCREW M8X25 Z/P | 15 |
| 22 | CFA00118 | GREASE NIPPLE M8X1.25 STRAIGHT | 4 |
| 23 | CFA00123 | NUT M10 NYLOC | 8 |
| 24 | CFA00126 | NUT M14 NYLOC | 2 |
| 25 | CFA00128 | NUT M16 NYLOC | 2 |
| 26 | CFA00132 | NUT M8 NYLOC Z/P | 16 |
| 27 | CFA00135 | WASHER FLAT 1 Z/P | 4 |
| 28 | CFA00147 | WASHER FLAT 8MM Z/P | 30 |
| 29 | CFA00201 | WASHER FLAT 10 MM Z/P | 8 |
| 30 | CFA00222 | WASHER FLAT 14MM Z/P | 2 |
| 31 | CFA00251 | WASHER SKM10 | 4 |
| 32 | CFA00339 | CIRCLIP 20MM EXTERNAL | 4 |
| 33 | CFA00387 | KEY 8X7X50 | 4 |

| No. | Part No | Description | Qty |
|---|---|---|---|
| 34 | CFA00413 | WASHER FLAT 20MM Z/P | 10 |
| 35 | CFA00475 | SPLIT PIN 5X40 Z/P | 2 |
| 36 | CFA00504 | ROLL PIN 12X60 ZP | 13 |
| 37 | CFA00519 | SETSCREW M8X16 FLD ZP | 2 |
| 38 | CFA00547 | BOLT M14X70 Z/P | 2 |
| 39 | CFA00556 | SPLIT PIN 6X50 Z/P | 2 |
| 40 | CFA00642 | ROLL PIN M7X60 | 13 |
| 41 | CFA00883 | KEY 8X7X20 | 2 |
| 42 | CFA01009 | ROLL PIN 14 X 60 Z/P DIN 1481 | 12 |
| 43 | CFA01083 | CIRCLIP 50MM INTERNAL | 4 |
| 44 | CKN00014 | KNIFE CHOPPER UNIT STD (LONG) | 25 |
| 45 | CMH00641 | SHAFT 22 X 1310 | 1 |
| 46 | CMH01109 | WASHER 17X40X12 Z/P | 2 |
| 47 | CMH01308 | SHAFT40X1320 23-25KNIFE SELECT | 1 |
| 47 | CMH01734 | SHAFT 40X1320 15K SELECT ARM 2 | 1 |
| 48 | CMH01314 | BUSH 30X45X20 | 2 |
| 49 | CMH01483 | PIN 14 X 70 Z/P | 2 |
| 50 | CMH01496 | SHAFT 35X1320 (25 K BAR) SELECT | 1 |
| 50 | CMH01731 | SHAFT 35X1320 SUSP FLR 15K BAR | 1 |
| 51 | CMH01656 | BUSH 30X50X16 Z/P | 2 |
| 52 | CMH01711 | PIN 20X36 Z/P | 2 |
| 53 | CRA00185 | RAM KNIFE ACTUATION BW | 2 |
| 54 | CRA00193 | RAM CHOPPER FLOOR 20X40 BW | 2 |
| 55 | CRA00637 | RAM 45X20 SELECT KNIFE | 2 |
| 56 | CTP00266 | KNIFE ACTUATOR ARM | 13 |
| 57 | CTP00360 | KNIFE ARM SELECTABLE FLOOR | 12 |
| 58 | CTP00372 | KNIFE RAM ACTUATOR | 2 |
| 59 | CZB00380 | 1.5MM D-FLOOR GUARD FUS3 & F5<br>*USED ON FUSION 3 UP TO SERIAL No 664000 & ON F5 SERIES UP TO SERIAL No 712266* | 1 |
| 59 | CZB00382 | 1.5MM SUSPENSION DROP FLOOR GUARD<br>*USED ON FUSION 3 FROM SERIAL No 664001 & ON F5 SERIES FROM SERIAL No 712267* | 1 |
| 59 | AGD00002 | DROP FLOOR GUARD V6 & VARIO | 1 |
| 60 | CZD02628 | 4MM L DROP FLOOR PART | 5 |
| 61 | CZD02959 | WASHER 10X40X4 | 4 |
| 62 | CZD05074 | 4MM L WASHER 16X68X4 | 4 |
| 63 | CZE00306 | 5MM L KNIFE BLANK BIG ROTOR | 1 |
| 64 | CZH03537 | 10MM L SHAFT BUSH BRACKET | 4 |

## Crop roller [On Fusion-F5-V6 from Serial No 655681-706661-800616] (775)

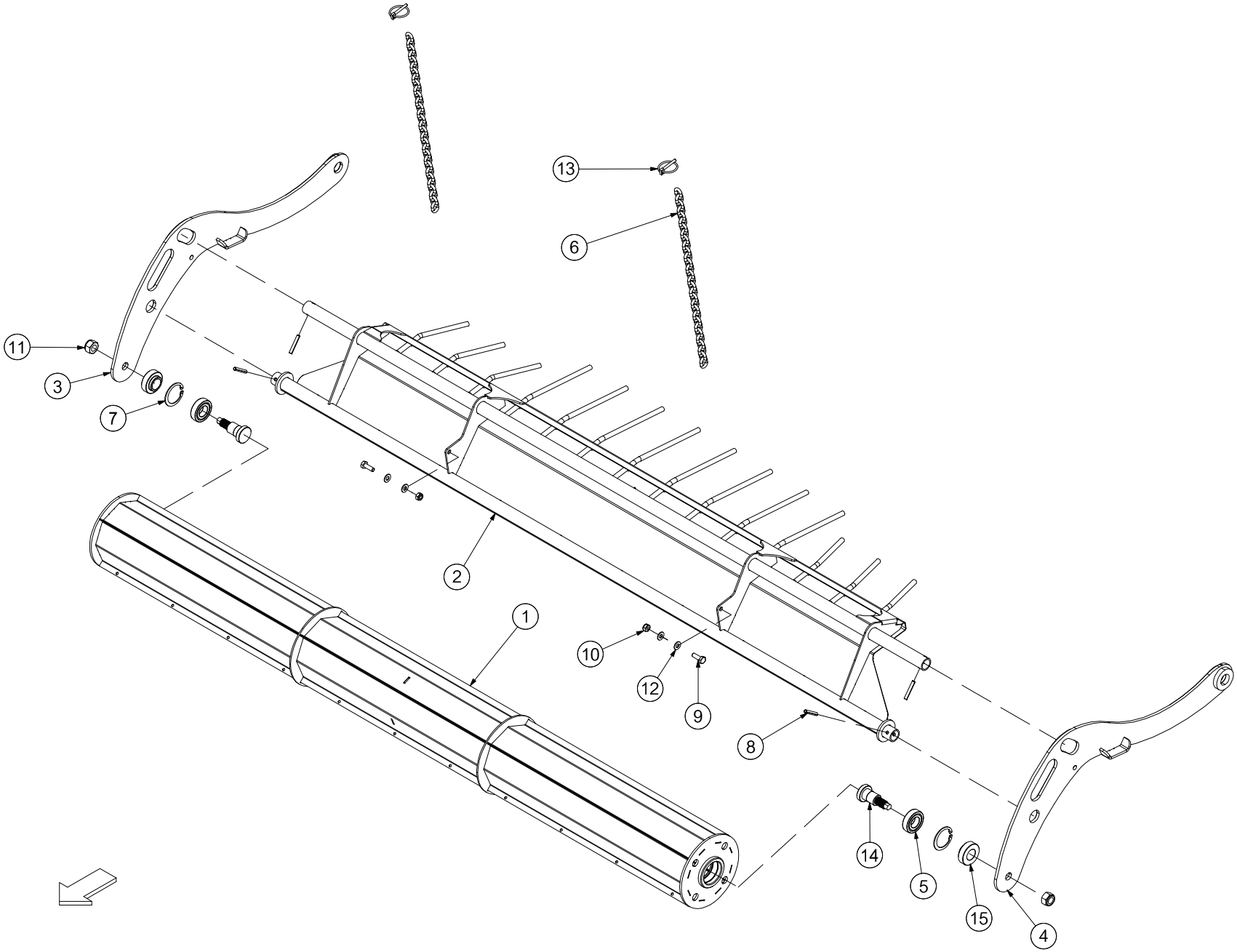

| No. | Part No | Description | Qty |
|---|---|---|---|
| 1 | ARC00324 | CROP ROLLER WELD ASSY SMALL | 1 |
| 2 | ARC00325 | CROP ROLLER COVER PLATE ASSY | 1 |
| 3 | ARC00326 | CROP ROLLER SIDE PLATE ASSY (RHS) | 1 |
| 4 | ARC00327 | CROP ROLLER SIDE PLATE ASSY (LHS) | 1 |
| 5 | CBR00299 | BEARING 206 NPPB 30MM SPHERICAL | 2 |
| 6 | CCH00186 | CHAIN 7X20 X 30 LINKS | 2 |
| 7 | CFA00002 | CIRCLIP INTERNAL 20X1 DIN 472 | 2 |
| 8 | CFA00010 | ROLL PIN 8X50 Z/P | 4 |
| 9 | CFA00025 | SETSCREW M10X30 ZP | 2 |
| *REPLACES CFA00016* | | | |
| 10 | CFA00123 | NUT M10 NYLOC | 2 |
| 11 | CFA00129 | NUT M20 NYLOC | 2 |
| 12 | CFA00201 | WASHER FLAT 10 MM Z/P | 4 |
| 13 | CFA00202 | LINCH PIN 6MM | 2 |
| 14 | CMH00148 | SHAFT 30X95 M20 THREAD | 2 |
| 15 | CMH01445 | BUSH 30X50X25 Z/P | 2 |

| No. | Part No | Description | Qty |
|---|---|---|---|

## Crop roller double (966)

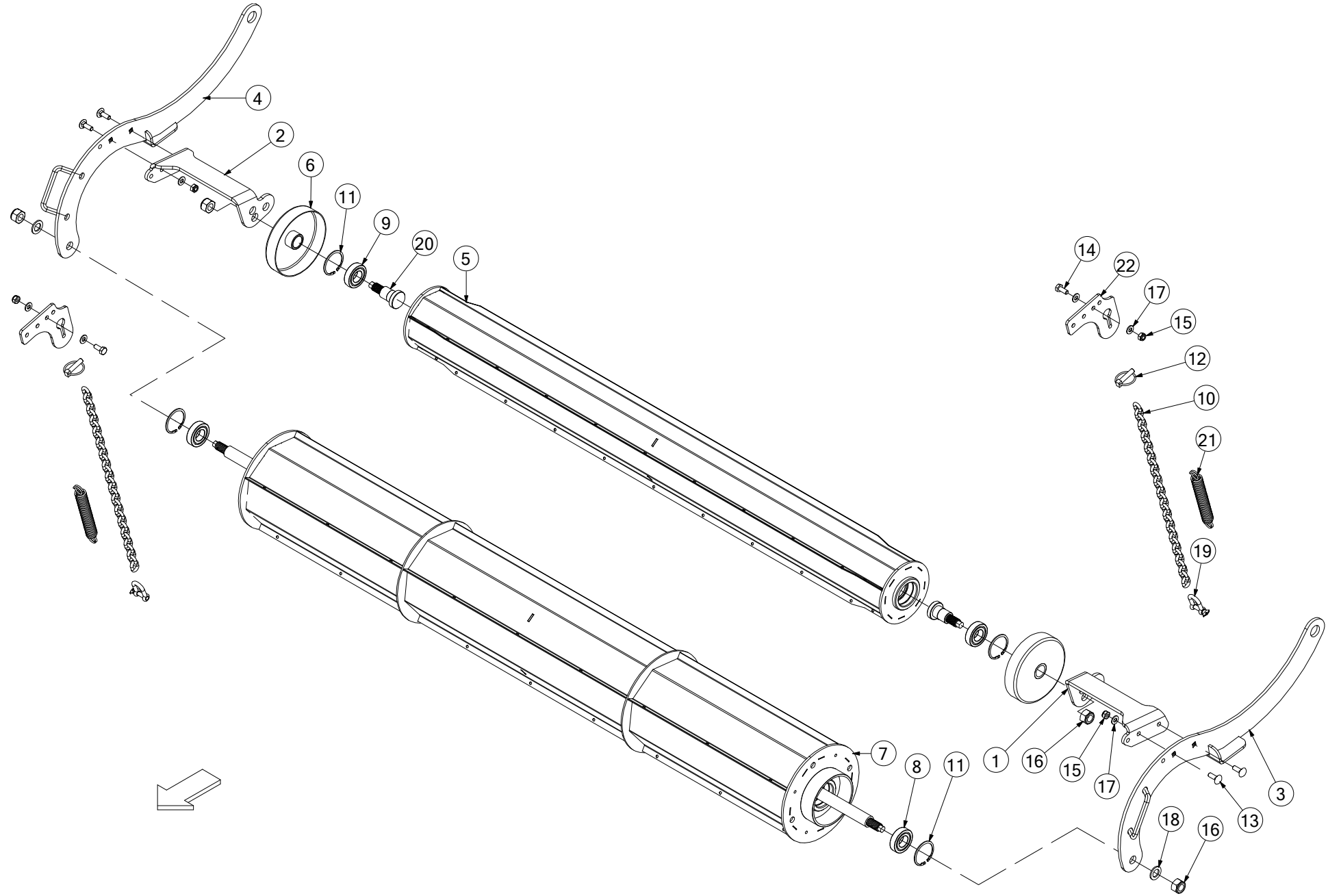

| No. | Part No | Description | Qty |
|---|---|---|---|
| 0 | ARC00378 | CROP ROLLER FULL ASSEM (CAMLESS) | 1 |
| *COMPLETE ASSEMBLY (INCLUDES ITEMS 1 THROUGH 21). USED IN SPECIFIC MARKETS, ON CAMLESS MACHINES ONLY.* | | | |
| 1 | ACH03150 | REAR CROP ROLLER HOLDER WELD ASSEM LHS | 1 |
| 2 | ACH03151 | REAR CROP ROLLER HOLDER WELD ASSEM RHS | 1 |
| 3 | ARC00379 | CROP ROLLER PLATE WELD ASSEM LHS ( CAMLESS ) | 1 |
| 4 | ARC00380 | CROP ROLLER PLATE WELD ASSEM RHS ( CAMLESS ) | 1 |
| 5 | ARC00387 | TOP ROLLER WELD ASSEM (SHORT) | 1 |
| 6 | ARC00392 | CROP ROLLER SEAL (LARGE) | 2 |
| 7 | ARC00466 | FRONT ROLLER ASSEM (DCR) | 1 |
| *INCLUDES ITEMS 8 & 11* | | | |
| 8 | CBR00024 | BEARING 62062RS | 2 |
| 9 | CBR00299 | BEARING 206 NPPB 30MM SPHERICAL | 2 |
| 10 | CCH00186 | CHAIN CROP ROLLER 7X20X32 LINKS | 2 |
| 11 | CFA00002 | 62MM INTERNAL CIRCLIP DIN 472 | 4 |
| 12 | CFA00005 | LINCH PIN 10MM | 2 |
| 13 | CFA00017 | SETSCREW M10X30 CUP SQ Z/P | 4 |
| 14 | CFA00024 | SETSCREW M10X25 Z/P | 4 |
| 15 | CFA00123 | NUT M10 NYLOC | 8 |
| 16 | CFA00129 | NUT M20 NYLOC | 4 |
| 17 | CFA00201 | WASHER FLAT 10 MM Z/P | 10 |
| 18 | CFA00413 | WASHER FLAT 20MM Z/P | 2 |
| 19 | CFA00457 | D SHACKLE 0.375" GAL | 2 |
| 20 | CMH00148 | SHAFT 30X86 M20 THREAD Z/P | 2 |
| 21 | CSG00320 | SPRING EXT 3.5X27.5X188 Z/P | 2 |
| 22 | CZF07624 | 6MM L DOUBLE CROP ROLLER CHAIN HOLDER | 2 |
| *USED ON FUSION VARIO ONLY (NOT SHOWN) PRIOR TO SERIAL No 900340* | | | |
| 22 | CZF07847 | CAMLESS REEL CHAIN HANGER | 1 |
| *USED ON V6 FROM SERIAL No 805001 & FUSION VARIO FROM SERIAL No 900340 (LH SIDE)* | | | |
| 22 | ACH02980 | PLATFORM BRACKET V6/ VARIO ASSY | 1 |
| *USED ON V6 FROM SERIAL No 805001 & FUSION VARIO FROM SERIAL No 900340 (RH SIDE)* | | | |
| 22 | CZF07625 | 6MM L DOUBLE CROP ROLLER CHAIN HOLDER F3 | 2 |
| *USED ON FUSION 3 ONLY (NOT SHOWN)* | | | |
| 22 | CZF07629 | 6MM L CAMLESS CHAIN PLATE F5000 / V6 | 2 |
| *USED ON F5 BALERS & V6 PRIOR TO SERIAL No 805001 (SHOWN)* | | | |

| No. | Part No | Description | Qty |
|---|---|---|---|

## Crop roller triple [From Serial No, (F5) 712699 & (V6) 805523] (1134)

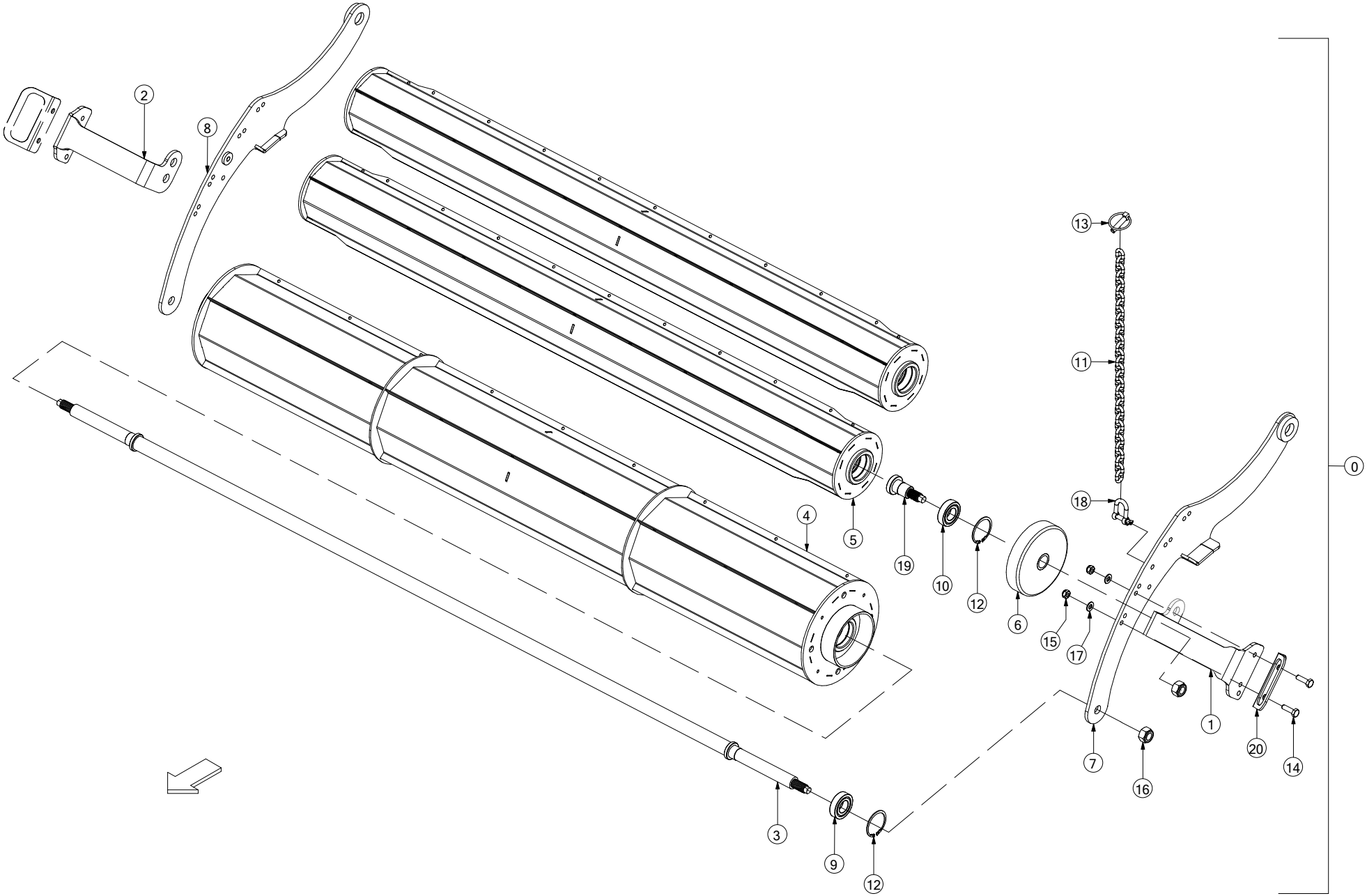

| No. | Part No | Description | Qty |
|---|---|---|---|
| Item | Part Code | Description | Qty |
| 0 | ARC00465 | Triple Crop Roller Assembly | 1 |
| *COMPLETE TRIPLE CROP ROLLER ASSEMBLY. USED IN SPECIFIC MARKETS, ON CAMLESS MACHINES ONLY.* | | | |
| 1 | ACH02922 | REAR CROP ROLLER HOLDER WELD ASSEM (LHS) | 2 |
| 2 | ACH02923 | REAR CROP ROLLER HOLDER WELD ASSEM (RHS) | 2 |
| 3 | ACH03042 | FRONT ROLLER AXLE WELD ASSEM ( CAMLESS ) | 1 |
| 4 | ARC00377 | ROLLER WELD ASSEM (CAMLESS) | 1 |
| 5 | ARC00387 | TOP ROLLER WELD ASSEM (SHORT) | 2 |
| 6 | ARC00392 | CROP ROLLER SEAL (LARGE) | 4 |
| 7 | ARC00472 | TCR CARRIER PLATE WELD ASSEM LHS | 1 |
| *USED ON F5 SERIES FROM SERIAL No 712699 TO 715036 & V6 SERIES FROM SERIAL No 805523 TO 808699* | | | |
| 7 | ARC00518 | TCR CARRIER WELD ASSEM LHS (APU00045) | 1 |
| *USED ON F5 SERIES FROM SERIAL No 715037 & V6 SERIES FROM SERIAL No 808700* | | | |
| 8 | ARC00473 | TCR CARRIER PLATE WELD ASSEM RHS | 1 |
| *USED ON F5 SERIES FROM SERIAL No 712699 TO 715036 & V6 SERIES FROM SERIAL No 805523 TO 808699* | | | |
| 8 | ARC00519 | TCR CARRIER WELD ASSEM RHS (APU00045) | 1 |
| *USED ON F5 SERIES FROM SERIAL No 715037 & V6 SERIES FROM SERIAL No 808700* | | | |
| 9 | CBR00024 | BEARING 62062RS | 2 |
| 10 | CBR00299 | BEARING 206 NPPB 30MM SPHERICAL | 4 |
| 11 | CCH00186 | CHAIN CROP ROLLER 7X20X32 LINKS | 2 |
| 12 | CFA00002 | 62MM INTERNAL CIRCLIP DIN 472 | 6 |
| 13 | CFA00005 | LINCH PIN 10MM | 2 |
| 14 | CFA00016 | BOLT M10X35 | 8 |
| 15 | CFA00123 | NUT M10 NYLOC | 8 |
| 16 | CFA00129 | NUT M20 NYLOC | 6 |
| 17 | CFA00201 | WASHER FLAT 10 MM Z/P | 12 |
| 18 | CFA00457 | D SHACKLE 0.375" GAL | 2 |
| 19 | CMH00148 | SHAFT 30X86 M20 THREAD Z/P | 4 |
| 20 | CZD00282 | 4MM L TCR FORMED HANDLE | 2 |

| No. | Part No | Description | Qty |
|---|---|---|---|

# PTO shaft [WWE2480]

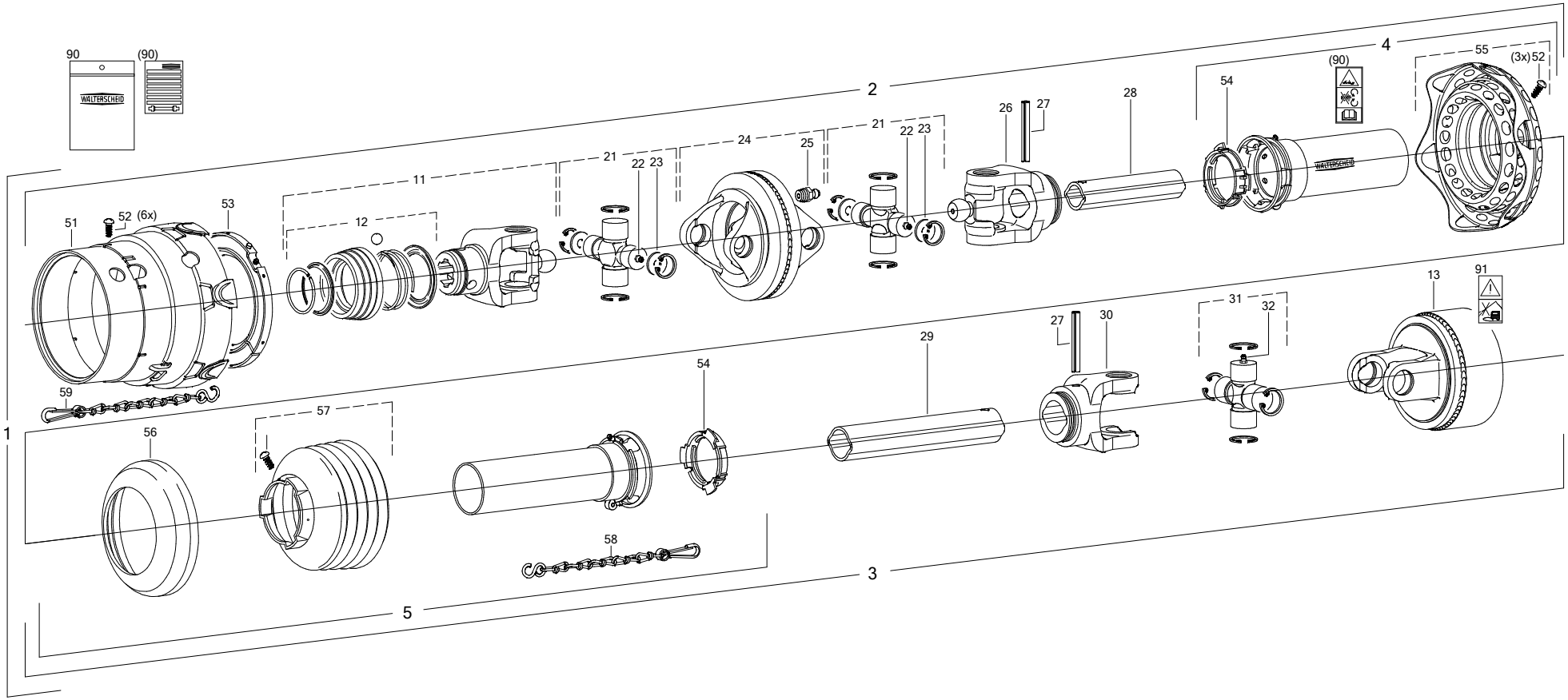

| No. | Part No | Description | Qty |
|---|---|---|---|
| 1 | CMT00165 | PTO SHAFT 1560MM FUSION2 | 1 |
| 2 | CMT00178 | PTO SHAFT FUS 2 TRACTOR HALF | 1 |
| 3 | CMT00179 | PTO SHAFT FUSION 2 BALER HALF | 1 |
| 4 | CMT00402 | PTO TUBE GUARDS FOR CMT00165 | 1 |
| *COMPLETE SLEEVE ASM (REPLACES CMT00167 - TRACTOR HALF)* | | | |
| 5 | CMT00402 | PTO TUBE GUARDS FOR CMT00165 | 1 |
| *COMPLETE SLEEVE ASM (REPLACES CMT00168 - MACHINE HALF)* | | | |
| 11 | CMT00081 | YOKE QUICK DISCONNECT 1 3/4" 6 SPLINE | 1 |
| 11 | CMT00186 | YOKE END 1 3/4" 20 SPLINE OPTION | 1 |
| 12 | CMT00174 | KIT QUICK RELEASE DRV SF 6 SPLINE ONLY | 1 |
| 13 | CMT00083 | CLUTCH CAM TYPE FUSION | 1 |
| 13a | CMT00471 | SPRING PACK CLUTCH 2200NM K64/24 | 1 |
| 13b | CMT00158 | CLAMP PIN BALER PTO SHAFT 7540 | 1 |
| *BOLT-PIN TO SECURE PTO SHAFT TO PTO STUB ON MACHINE GEARBOX* | | | |
| 21 | CMT00084 | UNIVERSAL JOINT TYPE 1 | 2 |
| 22 | CFA00097 | GREASE NIPPLE | 2 |
| 23 | CMT00085 | PLATE DIA 26.95X2 FUSION PTO | 4 |
| 24 | CMT00086 | YOKE DOUBLE WITH GREASE NIPPLE | 1 |
| 25 | CFA00628 | GREASE NIPPLE M8X1 STRAIGHT | 1 |
| 26 | CMT00087 | YOKE INNER SMALL PROFILE TUBE | 1 |
| 27 | CFA00629 | SPLIT PIN 10X80 | 2 |
| 28 | CMT00188 | PROFILE TUBE COATED INNER | 1 |
| 29 | CMT00190 | PROFILE TUBE OUTER | 1 |
| 30 | CMT00090 | INNER YOKE LARGE PROFILE TUBE | 1 |
| 31 | CMT00091 | UNIVERSAL JOINT TYPE 2 | 1 |
| 32 | CFA00103 | GREASE NIPPLE | 1 |
| 51 | CMT00169 | CONE GUARD PTO FUSION | 1 |
| 52 | CFA00630 | SCREW M4X10 FUSION PTO | 10 |
| 53 | CMT00093 | BEARING RING LARGE DIA. FUSION | 1 |
| 54 | CMT00095 | BEARING RING SMALL FUSION PTO | 2 |
| 55 | CMT00189 | FLEXIBLE GUARD CONE | 1 |
| 56 | CMT00096 | REINFORCEMENT COLLAR FUSION | 1 |
| 57 | CMT00097 | GUARD CONE FUSION PTO | 1 |
| 58 | CCH00046 | SAFETY CHAIN 4OOMM FUSION PTO | 1 |
| 59 | CCH00047 | SAFETY CHAIN 600MM FUSION PTO | 1 |
| 90 | CLT00082 | DECAL+MANUAL WARNING PTO SHAFT | 1 |
| 91 | CST00133 | DECAL NO HIGH PRESSURE CLEANER | 1 |

| No. | Part No | Description | Qty |
|---|---|---|---|

## Gearbox 1 (134)

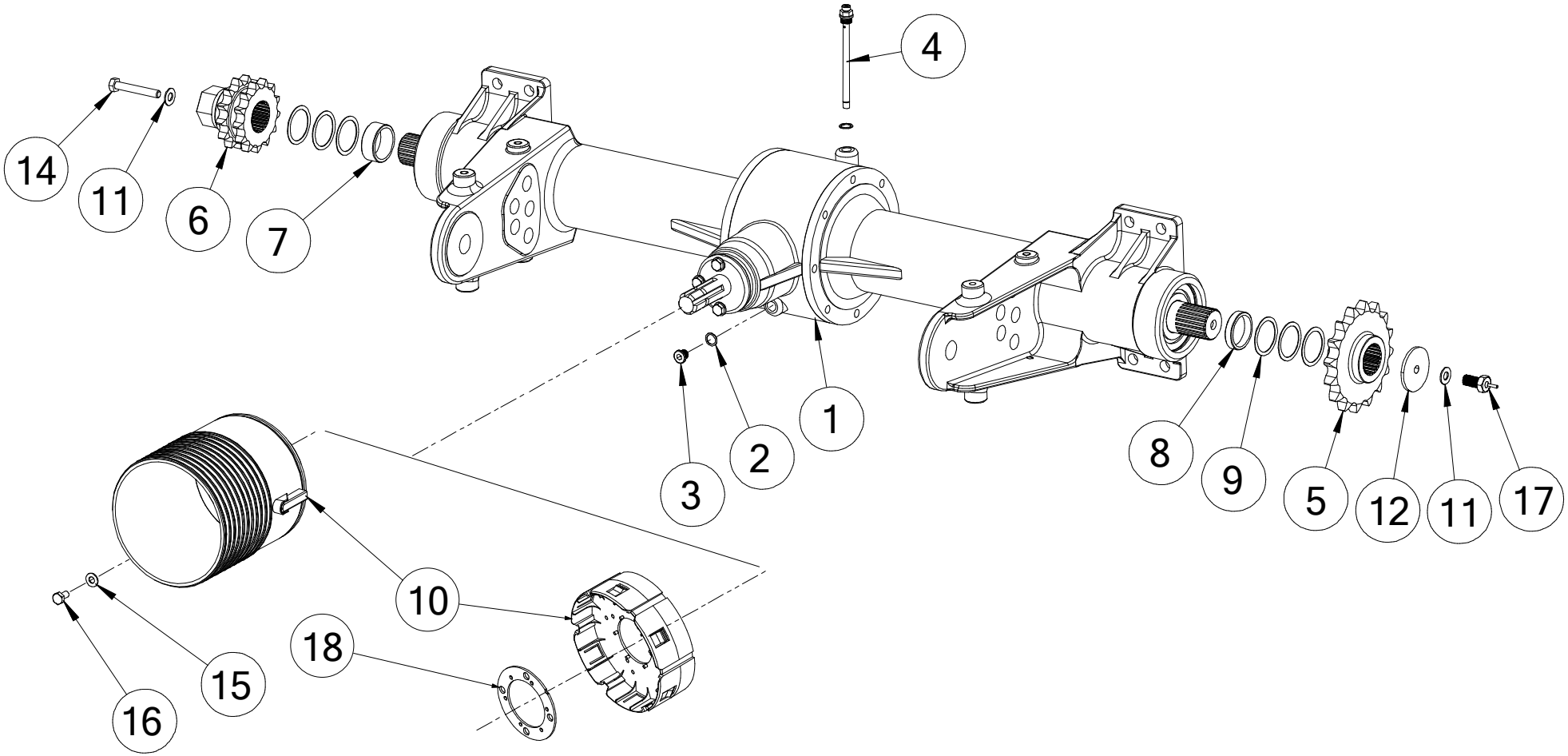

| No. | Part No | Description | Qty |
|---|---|---|---|
| 1 | CMT00106 | GEARBOX ASM ST BALER 540RPM SS<br>*540 RPM GEARBOX ASSEMBLY STANDARD (SHOWN)* | 1 |
| 1 | CMT00498 | GEARBOX 1000RPM HEAVY DUTY<br>*1000 RPM GEARBOX ASSEMBLY OPTIONAL (NOT SHOWN)* | 1 |
| 2 | CSE00127 | SEAL O-RING COPPER GEARBOX<br>*USED ON 540 RPM GEARBOX ONLY* | 2 |
| 3 | CMT00073 | DRAIN PLUG GEARBOX FUSION<br>*USED ON 540 RPM GEARBOX ONLY* | 1 |
| 4 | CMT00072 | FILLER BREATHER BALER GEARBOX<br>*USED ON 540 RPM GEARBOX CMT00106 ONLY* | 1 |
| 5 | CMH02236 | SPROCKET 1 1/4" 16T 50MM SPLINE | 1 |
| 6 | ARC00144 | SPROCKET 13T DUPLEX ASSY | 1 |
| 7 | CMH01029 | BUSH 50X60X23 F550 GEARBOX | 1 |
| 8 | CMH01030 | BUSH 50X60X12 F550 GEARBOX | 1 |
| 9 | CFA00048 | SHIM 50X62X1.0 | 6 |
| 10 | CMT00156 | GUARD GEARBOX<br>*USED WITH STD PTO SHAFT ON 540 RPM GEARBOX ONLY* | 1 |
| 10 | CMT00395 | PTO SHAFT GEARBOX ADAPTOR RING<br>*USED WITH HEAVY DUTY PTO SHAFT ON EITHER 540 RPM OR 1000 RPM GEARBOX* | 1 |
| 11 | CFA00250 | WASHER SKM12 | 2 |
| 12 | CMH02963 | BUSH STEPPED 12X70X10 Z/P<br>*REPLACES CZH02119 & CZC04301* | 1 |
| 14 | CFA00330 | BOLT M12X80 Z/P | 1 |
| 15 | CFA00251 | WASHER SKM10 | 4 |
| 16 | CFA00023 | SETSCREW M10X20 Z/P | 4 |
| 17 | CVA00563 | BEKA OIL PUMP DRIVE | 1 |
| 18 | CZC05636 | 3 MM L ADAPTOR PLATE<br>*USED WITH HEAVY DUTY PTO SHAFT ADAPTOR RING ON EITHER 540 RPM OR 1000 RPM GEARBOX* | 1 |

| No. | Part No | Description | Qty |
|---|---|---|---|

## Gearbox 2 [540 RPM] (135)

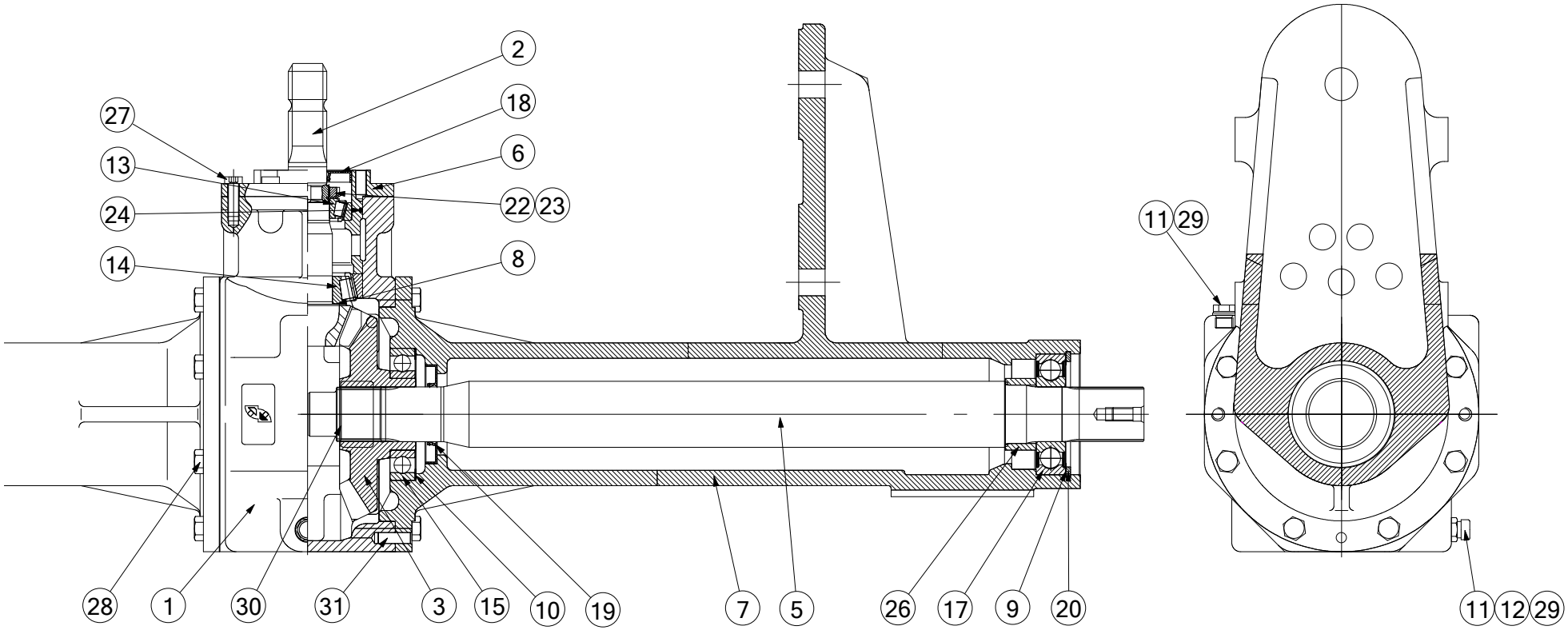

| No. | Part No | Description | Qty |
|---|---|---|---|
| 0 | CMT00106 | GEARBOX ASM ST BALER 540RPM SS | 1 |
| *COMPLETE 540 RPM GEARBOX ASSEMBLY* | | | |
| 1 | CMT00161 | GEARBOX HOUSING CENTRE | 1 |
| 2 | CMH02251 | INPUT SHAFT (PINION) | 1 |
| 3 | CMH02252 | BEVEL GEAR | 2 |
| *UP TO SERIAL NO. 704582 (F5 series)* | | *UP TO SERIAL NO. 800099 (V6 series)* | |
| 3 | CMH02458 | BEVEL GEAR | 2 |
| *FROM SERIAL NO. 704583 (F5 series)* | | *FROM SERIAL NO. 800100 (V6 series)* | |
| 5 | CMH02253 | MAIN SHAFT | 2 |
| 6 | CMT00160 | INPUT ASSY HOUSING | 1 |
| 7 | CMT00104 | GEARBOX HOUSING LEFT/RIGHT | 2 |
| *UP TO SERIAL NO. 704582 (F5 series)* | | *UP TO SERIAL NO. 800099 (V6 series)* | |
| 7 | CMT00244 | GEARBOX HOUSING LEFT/RIGHT | 2 |
| *FROM SERIAL NO. 704583 (F5 series)* | | *FROM SERIAL NO. 800100 (V6 series)* | |
| 8 | CFA02204 | SHIM 45X55X0.1 | 0 |
| 8 | CFA02205 | SHIM 45X55X0.2 | 0 |
| 8 | CFA02206 | SHIM 45X55X0.5 | 0 |
| 8 | CFA02207 | SHIM 45X55X1 | 0 |
| 9 | CFA02208 | SHIM 90X110X0.1 | 0 |
| 9 | CFA02209 | SHIM 90X110X0.2 | 0 |
| 9 | CFA02210 | SHIM 90X110X0.5 | 0 |
| 9 | CFA02211 | SHIM 90X110X1 | 0 |
| 10 | CFA00658 | SHIM 100X120X0.1 | 0 |
| 10 | CFA02212 | SHIM 100X120X0.2 | 0 |
| 10 | CFA00660 | SHIM 100X120X0.5 | 0 |
| 10 | CFA00661 | SHIM 100X120X1 | 0 |
| 11 | CMT00073 | DRAIN PLUG GEARBOX FUSION | 1 |
| 12 | CMT00072 | FUSION GEARBOX BREATHER | 1 |
| 13 | CBR00115 | TAPER ROLLER BEARING 3020 8A | 1 |
| 14 | CBR00116 | TAPER ROLLER BEARING 3030 9A | 1 |
| 15 | CBR00114 | BEARING 6213 C3 | 2 |
| *UP TO SERIAL NO. 704582 (F5 series)* | | *UP TO SERIAL NO. 800099 (V6 series)* | |
| 15 | CBR00296 | BEARING 6313 C3 | 2 |
| *FROM SERIAL NO. 704583 (F5 series)* | | *FROM SERIAL NO. 800100 (V6 series)* | |
| 17 | CBR00113 | BEARING 6310 2RSR | 2 |
| 18 | CSE00132 | RADIAL SEAL 35X80X10 | 1 |
| 19 | CSE00133 | RADIAL SEAL 50X90X10 | 2 |
| 20 | CFA00652 | CIRCLIP 110X4 | 2 |
| 22 | CFA02202 | SLOTTED NUT KM 8 | 1 |
| 23 | CFA02203 | LOCKING WASHER MB 8 | 1 |
| 24 | CSE00142 | O RING 95X3MM | 1 |
| 26 | CMH02255 | BUSHING | 2 |
| 27 | CFA00025 | SETSCREW M10X30 | 6 |
| 28 | CFA00324 | SETSCREW M12X40 | 12 |
| 29 | CSE00127 | COPPER WASHER | 2 |
| 30 | CST00624 | NAME/ RATING PLATE | 1 |
| 31 | CFA00662 | DOWEL | 2 |
| 32 | REP00040 | GEARBOX REPAIR KIT | 0 |
| *UP TO SERIAL NO. 704582 (F5 series)* | | *UP TO SERIAL NO. 800099 (V6 series)* | |
| 32 | REP00056 | GEARBOX REPAIR KIT | 0 |

| No. | Part No | Description | Qty |
|---|---|---|---|
| *FROM SERIAL NO. 704583 (F5 series)* | | *FROM SERIAL NO. 800100 (V6 series)* | |

# Gearbox 3 [1000 RPM] (1132)

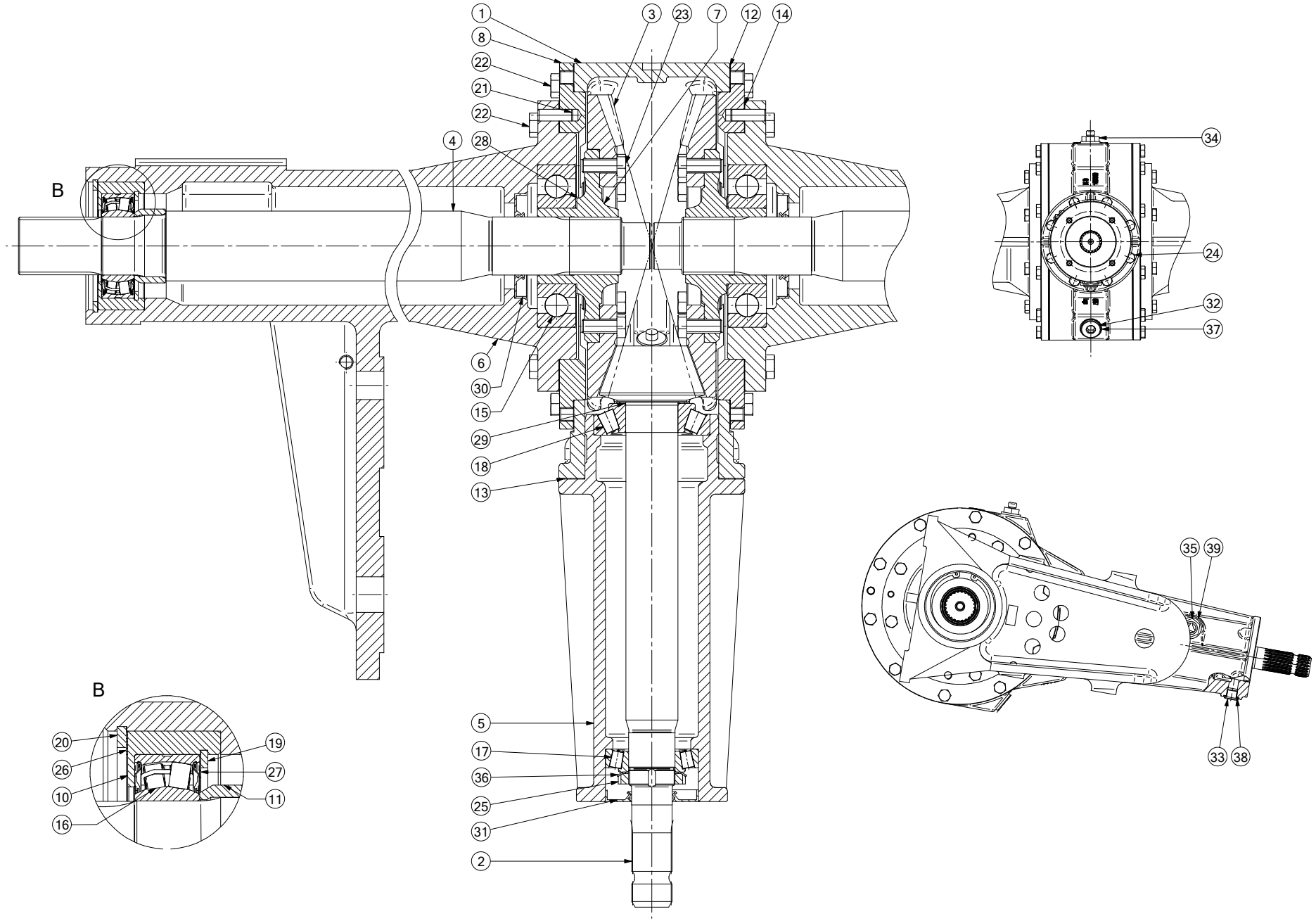

| No. | Part No | Description | Qty |
|---|---|---|---|
| 0 | CMT00498 | GEARBOX 1000RPM HEAVY DUTY | 1 |
| *COMPLETE 1000RPM GEARBOX ASM* | | | |
| 1 | CMT00666 | CENTER HOUSING 1000RPM GEARBOX HD | 1 |
| 2 | CMT00667 | INPUT PINION SHAFT 1000RPM SS | 1 |
| 3 | CMT00686 | CROWN WHEEL 1000RPM SS | 2 |
| 4 | CMH02253 | SHAFT SS GEARBOX | 2 |
| 5 | CMT00668 | INPUT PINION SHAFT HOUSING 1000RPM GB | 1 |
| 6 | CMT00669 | 1000RPM GEAR BOX SHAFT HOSUING LHS/RHS | 2 |
| 7 | CMT00670 | 1000RPM GEARBOX HUB | 2 |
| 8 | CMT00671 | BOLT ON COLLAR CENTER HUB 1000RPM GB | 2 |
| 10 | CMT00672 | 1000RPM GB BEARING BUSHING SHAFT END | 2 |
| *USED ON FUSION 3 FROM SERIAL No 665220* | | | |
| 11 | CMT00673 | 1000RPM GB SLEEVE SHAFT END | 2 |
| *USED ON FUSION 3 FROM SERIAL No 665220* | | | |
| 12 | CSE40043 | SEAL ⌀313X⌀265X0,5 | 2 |
| 13 | CSE40044 | SEAL ⌀158x⌀115x0,5 | 1 |
| 14 | CSE40045 | SEAL ⌀248x⌀195x0,5 | 2 |
| 15 | CBR00296 | BEARING 6313 C3 | 2 |
| 16 | CBR00113 | BEARING 6310-2RS1 SKF EXPLORER | 2 |
| *USED ON FUSION 3 UP TO SERIAL No 665219* | | | |
| 16 | CBR00385 | BEARING BS2-2210-2RS/VT143 | 2 |
| *USED ON FUSION 3 FROM SERIAL No 665220* | | | |
| 17 | CBR00115 | BEARING TAPER 30208A 40X80X20 | 1 |
| 18 | CBR02011 | BEARING TAPER ROLLER 31309 | 1 |
| 19 | CFA00903 | CIRCLIP 90MM INTERNAL DIN472 | 2 |
| *USED ON FUSION 3 FROM SERIAL No 665220* | | | |
| 20 | CFA00631 | CIRCLIP 110 INTERNAL DIN 472 | 2 |
| 21 | CFA02419 | CYLINDRICAL PIN 10M6X30 | 2 |
| 22 | CFA00806 | SETSCREW M12X30 8.8 DIN933 PLAIN | 36 |
| 23 | CFA02420 | SETSCREW M12X30 10.9 DIN933 PLAIN | 16 |
| 24 | CFA00025 | SETSCREW M10X30 Z/P | 8 |
| 25 | CFA02421 | KM 8 BEARING LOCKNUT | 1 |
| 26 | CFA02208 | SHIM 90X110X0.1 | 1 |
| *USED ON FUSION 3 FROM SERIAL No 665220* | | | |
| 26 | CFA02209 | SHIM 90X110X0.2 | 1 |
| *USED ON FUSION 3 FROM SERIAL No 665220* | | | |
| 26 | CFA02210 | SHIM 90X110X0.5 | 1 |
| *USED ON FUSION 3 FROM SERIAL No 665220* | | | |
| 26 | CFA02211 | SHIM 90X110X1 | 1 |
| *USED ON FUSION 3 FROM SERIAL No 665220* | | | |
| 27 | CFA02428 | SHIM 70X90X0.1 | 1 |
| *USED ON FUSION 3 FROM SERIAL No 665220* | | | |
| 27 | CFA02429 | SHIM 70X90X0.2 | 1 |
| *USED ON FUSION 3 FROM SERIAL No 665220* | | | |
| 27 | CFA02425 | SHIM 70X90X0.5 | 1 |
| *USED ON FUSION 3 FROM SERIAL No 665220* | | | |
| 28 | CFA02430 | SHIM 65X85X0.1 | 1 |
| 28 | CFA02431 | SHIM 65X85X0.2 | 1 |
| 28 | CFA02432 | SHIM 65X85X0.5 | 1 |
| 28 | CFA02424 | SHIM 65X85X1 | 1 |
| 29 | CFA02204 | SHIM 45X56X0.1 | 1 |

| No. | Part No | Description | Qty |
|---|---|---|---|
| 29 | CFA02205 | SHIM 45X56X0.2 | 1 |
| 29 | CFA02206 | SHIM 45X56X0.5 | 1 |
| 29 | CFA02207 | SHIM 45X56X1 | 1 |
| 30 | CSE00133 | SEAL RADIAL 50X90X10 | 2 |
| 31 | CSE00132 | SEAL RADIAL 35X80X10 DIN 3760 | 1 |
| 32 | CMT00674 | DRAIN PLUG 3/4 GEARBOX | 1 |
| 33 | CFA01216 | PLUG G3/8 DIN908 | 1 |
| 34 | CMT00675 | BREATHER 3/4 1000RPM GEARBOX | 1 |
| 35 | CFA02426 | SIGHT GLASS G 1/2 WASHER | 1 |
| 36 | CFA02427 | MB8 LOCK WASHER | 1 |
| 37 | CFA02422 | WASHER 26X31-AI ALUMINIUM | 2 |
| 38 | CFA01217 | WASHER ALUMINIUM 1.5X17X22 | 1 |
| 39 | CFA02423 | WASHER ALUMINIUM 2X21X27 | 1 |

## ***Drawbar (952)***

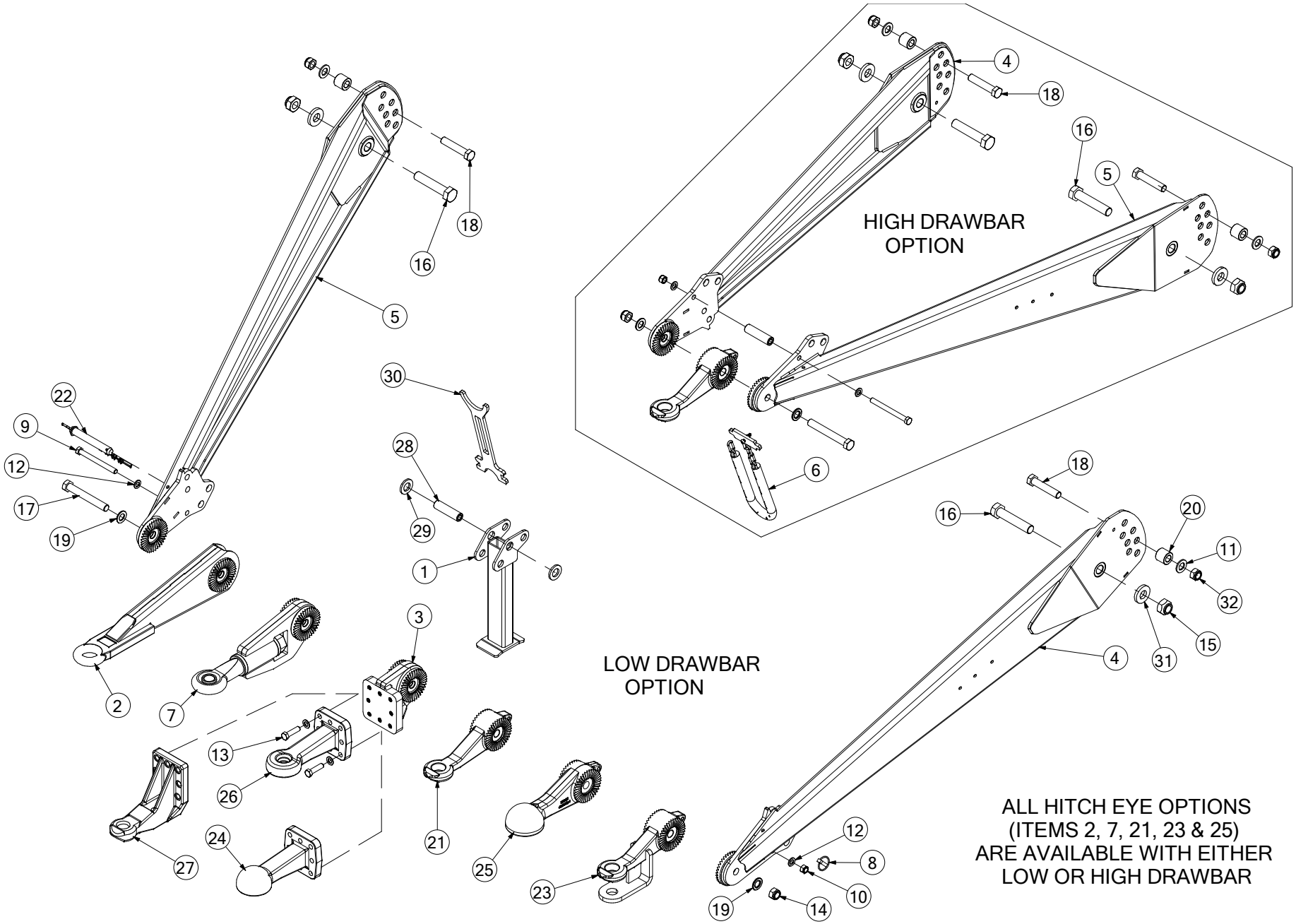
HIGH DRAWBAR
OPTION
LOW DRAWBAR
OPTION
ALL HITCH EYE OPTIONS
(ITEMS 2, 7, 21, 23 & 25)
ARE AVAILABLE WITH EITHER
LOW OR HIGH DRAWBAR
1
2
3
4
5
6
7
8
9
10
11
12
13
14
15
16
17
18
19
20
21
22
23
24
25
26
27
28
29
30
31
32

| No. | Part No | Description | Qty |
|---|---|---|---|
| 0 | ADB00140 | DRAWBAR COMPLETE ASSEMBLY<br>*INCLUDES STANDARD HITCH EYE ITEM 21* | 1 |
| 1 | ADB00068 | DRAWBAR STAND SWIVEL STANDARD | 1 |
| 2 | ADB00083 | HITCH EYE 600MM CTR (NORWAY)<br>*OPTIONAL* | 1 |
| 3 | ADB00095 | GERMAN COUPLING ADAPTOR 8-HOLE<br>*NO LONGER AVAILABLE* | 1 |
| 4 | ADB00141 | DRAWBAR WELD (LEFT) FUSION<br>*STANDARD DRAWBAR LH* | 1 |
| 4 | ADB00204 | DRAWBAR WELD (LONG) LEFT FUSION<br>*LONG DRAWBAR LH USED WITH BALL COUPLING (ITEM 25) ONLY* | 1 |
| 5 | ADB00142 | DRAWBAR WELD (RIGHT) FUSION<br>*STANDARD DRAWBAR RH* | 1 |
| 5 | ADB00205 | DRAWBAR WELD (LONG) RIGHT FUSION<br>*LONG DRAWBAR RH USED WITH BALL COUPLING (ITEM 25) ONLY* | 1 |
| 6 | ADB00163 | HIGH DRAWBAR PTO HOLDER<br>*PTO HOLDER FOR HIGH DRAWBAR OPTION ONLY (REPLACES ADB00100)* | 1 |
| 7 | ADB00174 | HITCH EYE SWIVEL 50MM FUSION 3<br>*OPTIONAL* | 1 |
| 8 | CFA00005 | LINCH PIN 10MM | 1 |
| 9 | CFA00061 | BOLT M16X170 ZP DIN931 8.8 Z/P | 1 |
| 10 | CFA00128 | NUT M16 NYLOC | 1 |
| 11 | CFA00135 | WASHER FLAT 1" Z/P | 2 |
| 12 | CFA00140 | WASHER FLAT 16MM Z/P | 10 |
| 13 | CFA00409 | BOLT M16 X 60 Z/P | 8 |
| 14 | CFA00130 | NUT M24 STD NYLOC Z/P | 1 |
| 15 | CFA00420 | NUT M30X2 NYLOC DIN985 8.8 Z/P | 2 |
| 16 | CFA00522 | BOLT M30X2X150 DIN960 10.9 Z/P | 2 |
| 17 | CFA00795 | BOLT M24X3X180 STD GRADE 8.8 Z/P | 1 |
| 18 | CFA00748 | BOLT M24X2X120 DIN960 10.9 Z/P | 2 |
| 19 | CFA00796 | WASHER PEINER M24 GALV DIN6916 | 2 |
| 20 | CMH01005 | BUSH 44.45X20X40 | 2 |
| 20 | CMH01950 | BUSH 25X60 STEPPED 45<br>*ECCENTRIC BUSH USED WITH LONG DRAWBAR/BALL COUPLING OPTION ONLY* | 2 |
| 21 | ADB00150 | HITCH EYE COUPLING RING STD Ø40<br>*STANDARD HITCH EYE (ADB00150 IS A DIRECT REPLACEMENT FOR CTP00092 & CTP00317)* | 1 |
| 22 | CTP00265 | PIN HITCH 1" BALER DRAWBAR | 1 |
| 23 | CTP00274 | HITCH EYE AMERICIAN BALER<br>*OPTIONAL* | 1 |
| 24 | CTP00292 | COUPLING HEAD BALL K80-3192 8H<br>*NO LONGER AVAILABLE - ORDER ADB00198 (ITEM 25)* | 1 |
| 25 | ADB00198 | K80 ISO24347 BALL COUPLER SPOON<br>*OPTIONAL* | 1 |
| 26 | CTP00367 | HITCH EYE 100X110 DIN11026 40Ø<br>*NO LONGER AVAILABLE - ORDER ADB00150 (ITEM 21)* | 1 |
| 27 | CTP00469 | HITCH EYE_00.652.50.1-A02_DIN11026<br>*NO LONGER AVAILABLE - ORDER ADB00150 (ITEM 21)* | 1 |
| 27a | CFA02275 | SETSCREW M16X60 SOC CAP 10.9 Z/P<br>*USED IN BOTTOM CENTRE HOLE* | 1 |
| 27b | CFA00783 | WASHER NL16 NORD-LOCK<br>*USED IN BOTTOM CENTRE HOLE* | 1 |
| 28 | CXT00419 | BUSHING C030X7X112 | 1 |

| No. | Part No | Description | Qty |
|---|---|---|---|
| 29 | CZF04263 | 6MM L DRAWBAR WASHER Z/P | 2 |
| 30 | CZH02914 | 10MM L PTO SUPPORT STAND BALER<br>*PTO HOLDER FOR LOW DRAWBAR OPTION ONLY* | 1 |
| 31 | CZH04335 | 10MM L WASHER 30X65X10 Z/P | 2 |
| 32 | CFA00419 | NUT M24X2 NYLOC DIN985 8.8 Z/P | 2 |

## ***Screw type jack (349)***

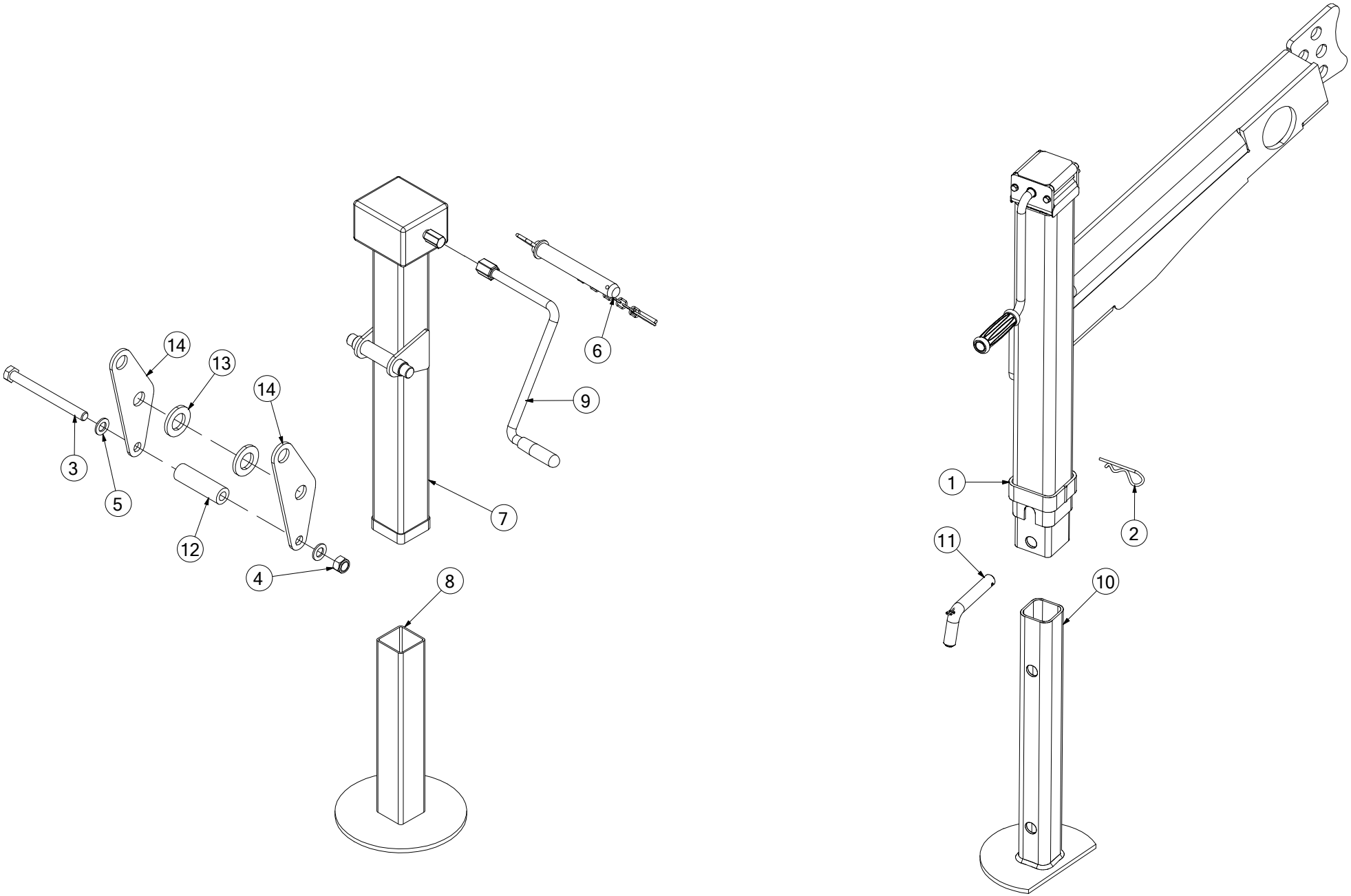

| No. | Part No | Description | Qty |
|---|---|---|---|
| 1 | ADB00104 | JACK SCREW F5-V6 SERIES C/W CR<br>*HIGH HITCH STAND (INCLUDES ITEMS 2, 10 & 11)* | 1 |
| 1a | KST00090 | HIGHSTAND BEVEL GEAR REPLACEMENT KIT<br>*SET OF REPLACEMENT BEVEL GEARS FOR HIGH HITCH STAND REPAIR* | 1 |
| 2 | CFA00004 | R-CLIP 4MM | 1 |
| 3 | CFA00061 | BOLT M16X170 Z/P | 1 |
| 4 | CFA00128 | NUT M16 NYLOC | 1 |
| 5 | CFA00140 | WASHER FLAT 16MM Z/P | 2 |
| 6 | CTP00265 | PIN HITCH 1 BALER DRAWBAR<br>*INCLUDES CHAIN & LINCH-PIN* | 1 |
| 7 | ACH00708 | PARKING JACK ADJ FUS F5 RANGE<br>*LOW HITCH STAND (INCLUDES ITEM 8 & 9) REPLACES CTP00294* | 1 |
| 8 | CTP00296 | PARKING JACK FUS F5 BOTTOM<br>*LOW HITCH STAND LEG (SPECIFY WHICH TYPE KNOTT OR RUDIFLEX)* | 1 |
| 9 | CTP00297 | PARK JACK HANDLE SQUARE (RUDIFLEX)<br>*LOW HITCH STAND ONLY (RUDIFLEX SQUARE)* | 1 |
| 9 | CTP00612 | JACK HANDLE HEXAGONAL HEAD (KNOTT)<br>*LOW HITCH STAND ONLY (KNOTT HEX)* | 1 |
| 10 | CTP00081 | LEG EXT PIECE PARKING JACK<br>*HIGH HITCH STAND LEG* | 1 |
| 11 | CTP10002 | PIN PARKING JACK BALER | 1 |
| 12 | CXT00502 | BUSHING C030X7X100 | 1 |
| 13 | CZF04263 | 6MM L DRAWBAR WASHER Z/P | 2 |
| 14 | CZF04979 | 6MM L STAND TRANSPORT BRACKET | 2 |

| No. | Part No | Description | Qty |
|---|---|---|---|

## Steps & Platform (739)

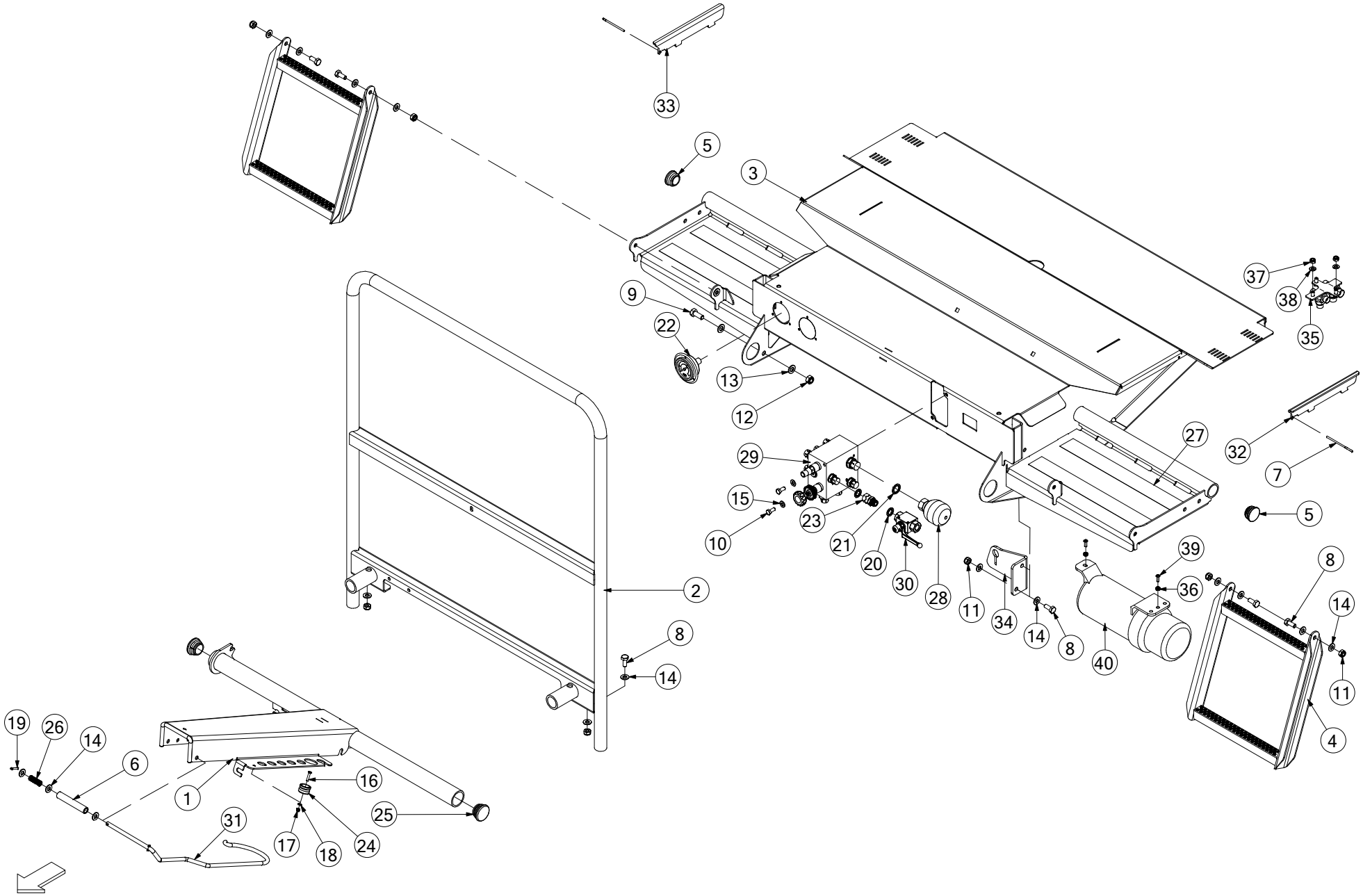

| No. | Part No | Description | Qty |
|---|---|---|---|
| 1 | ACN00198 | HOSE TRAY COMP ASSM | 1 |
| *COMPLETE HOSE TRAY ASSEMBLY* | | | |
| 2 | AGD00003 | GUARD TUBULAR FRAME PLATFORM F5000 | 1 |
| 3 | ALA00476 | PLATFORM / NET BOX F550 | 1 |
| 4 | ART00349 | LOWER STEP ASSEMBLY F5 | 2 |
| 5 | CBC00005 | CAP PLASTIC INSERT ROUND 42.4MM | 2 |
| 6 | CBC00168 | 12MM ID NYLON TUBING | 1 |
| *USED UP TO SERIAL No 713052* | | | |
| 6 | CBC00177 | 14MM ID NYLON TUBING | 1 |
| *USED FROM SERIAL No 713053* | | | |
| 7 | CFA00004 | R-CLIP 4MM | 2 |
| 8 | CFA00024 | SETSCREW M10X25 Z/P | 8 |
| 9 | CFA00032 | SETSCREW M12X30 Z/P | 1 |
| 10 | CFA00052 | SETSCREW M8X20 Z/P | 2 |
| 11 | CFA00123 | NUT M10 NYLOC | 8 |
| 12 | CFA00124 | NUT M12 NYLOC | 1 |
| 13 | CFA00138 | WASHER FLAT 12MM Z/P | 5 |
| *3 USED WITH ITEM 31 FROM SERIAL No 713053* | | | |
| 14 | CFA00201 | WASHER FLAT 10 MM Z/P | 23 |
| *3 USED WITH ITEM 31 UP TO SERIAL No 713052 (USE 3X ITEM 13 FROM SERIAL No 713053 ONWARDS)* | | | |
| 15 | CFA00249 | WASHER SKM8 | 2 |
| 16 | CFA00261 | SETSCREW M5X25 CSK HEX SS | 2 |
| 17 | CFA00321 | NUT M5 NYLOC | 2 |
| 18 | CFA00337 | WASHER FLAT 5MM Z/P | 2 |
| 19 | CFA02301 | 4 X 25 SPLITPIN Z/P | 1 |
| 20 | CHY00020 | WASHER DOWTY 3/8 | 2 |
| 21 | CHY00053 | WASHER DOWTY 1/2 | 1 |
| 22 | CHY00133 | GAUGE PRESSURE 63DIA FLANGE | 1 |
| 23 | CHY02098 | ADAPTOR 3/8 BSP M-F | 1 |
| 24 | CMH00873 | BLANKING CAP QR ZP 1/2 FEMALE | 2 |
| 25 | CPL00086 | BLANKING CAP 40MM ID | 2 |
| 26 | CSG00286 | SPRING COMP 1.8X14X40X8 | 1 |
| *USED UP TO SERIAL No 713052* | | | |
| 26 | CSG00316 | SPRING COMP 2X16.2X40 | 1 |
| *USED FROM SERIAL No 713053* | | | |
| 27 | CST00699 | PLATFORM GRIP TAPE F5 | 4 |
| 28 | CVA00151 | ACCUMULATOR 0.075L 50 BAR | 1 |
| 29 | CVA00273 | DOOR KNIFE CONTROL V | 1 |
| 30 | CVA00613 | VALVE 3/8 W LEVER LOCK & HOLES | 1 |
| *REPLACES VALVE CVA03100* | | | |
| 31 | CXR00218 | ROD 10 x 785 FORMED | 1 |
| *USED UP TO SERIAL No 713052* | | | |
| 31 | CXR00303 | ROD 12 X 785 FORMED | 1 |
| *USED FROM SERIAL No 713053* | | | |
| 32 | CZD04531 | 4MM L NET ROLL STOP LHS F550 | 1 |
| 33 | CZD04582 | 4MM L NET ROLL STOP RHS F550 | 1 |
| 34 | CZF03215 | 6MM L CHAIN BRACKET ST BALER | 1 |
| 35 | ALA01042 | T-PIECE WELD ASSEM PLATE | 1 |
| 36 | CFA00131 | NUT M6 NYLOC | 2 |
| 37 | CFA00132 | NUT M8 NYLOC Z/P | 3 |
| 38 | CFA00147 | WASHER FLAT 8MM ZP | 3 |

| No. | Part No | Description | Qty |
|---|---|---|---|
| 39 | CFA00427 | SETSCREW M6X16 BUTTON HEAD Z/P | 2 |
| 40 | CPL00267 | LARGE CIRCULAR MANUAL HOLDER | 1 |
| *USED FROM SERIAL No 712583* | | | |

## Chassis (748)

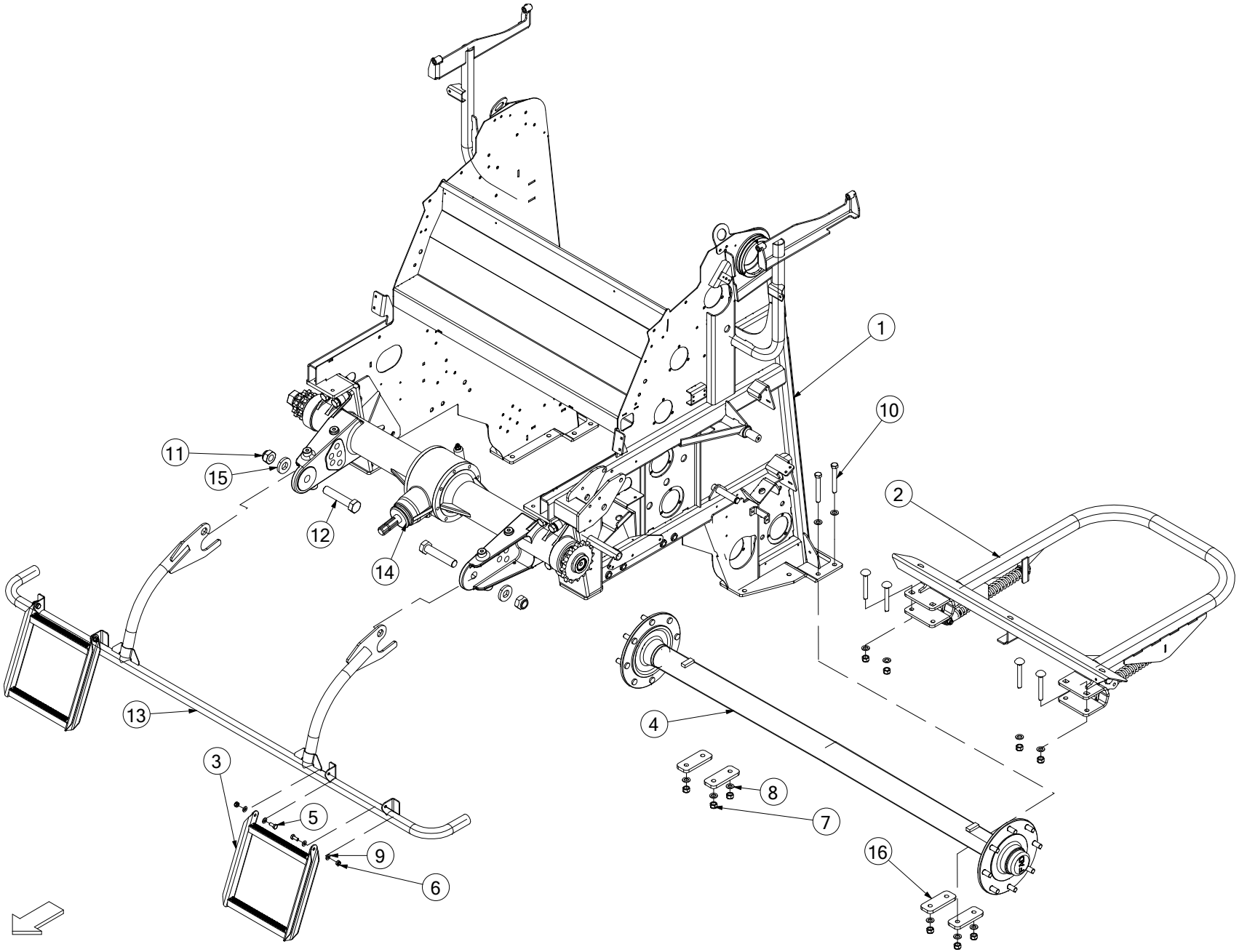

| No. | Part No | Description | Qty |
|---|---|---|---|
| 1 | ACH01055 | FRONT DOOR WELD ASSY F5 SERIES<br>*USED ON ALL F5 SERIES BALERS (EXCEPT F5600 PLUS)* | 1 |
| 1 | ACH01469 | FRONT DOOR WELD ASSY F5 NRF<br>*USED ON F5600 PLUS MACHINES ONLY* | 1 |
| 2 | ALA00511 | BALE DAMPER ASSEMBLY F550<br>*USED ON ALL F5 SERIES BALERS (EXCEPT F5600 PLUS)* | 1 |
| 2 | ARC00425 | F5600+ BALE EJECTOR KIT<br>*(NOT SHOWN) USED ON F5600 PLUS MACHINES ONLY* | 1 |
| 3 | ART00349 | LOWER STEP ASSEMBLY F5 | 2 |
| 4 | CAX00063 | AXLE ASSY ST BALER | 1 |
| 5 | CFA00024 | SETSCREW M10X25 Z/P | 4 |
| 6 | CFA00123 | NUT M10 NYLOC | 4 |
| 7 | CFA00128 | NUT M16 NYLOC | 8 |
| 8 | CFA00140 | WASHER FLAT 16MM Z/P | 16 |
| 9 | CFA00201 | WASHER FLAT 10 MM Z/P | 8 |
| 10 | CFA00967 | BOLT M16 X 130 Z/P DIN 931 GRADE 10.9<br>*STANDARD AXLE (REPLACES CFA00209)* | 8 |
| 10 | CFA00968 | BOLT M16 X 140 Z/P DIN 931 GRADE 10.9<br>*BRAKED AXLE (REPLACES CFA00929)* | 8 |
| 11 | CFA00420 | NUT M30X2 NYLOC FINE THREAD | 2 |
| 12 | CFA00522 | BOLT M30X150 METRIC FINE THREAD | 2 |
| 13 | CGD00261 | GUARD FRONT F550 (2012 MODEL) | 1 |
| 14 | CMT00106 | GEARBOX ASM ST BALER 540RPM SS | 1 |
| 14 | CMT00498 | GEARBOX 1000RPM HEAVY DUTY<br>*OPTIONAL* | 1 |
| 15 | CZH04335 | 10MM L WASHER 30x65x10 Z/P | 2 |
| 16 | CZI02048 | 12MM L AXLE MOUNT PLATE F5 | 4 |

| No. | Part No | Description | Qty |
|---|---|---|---|

## ***Bale dropper (750)***

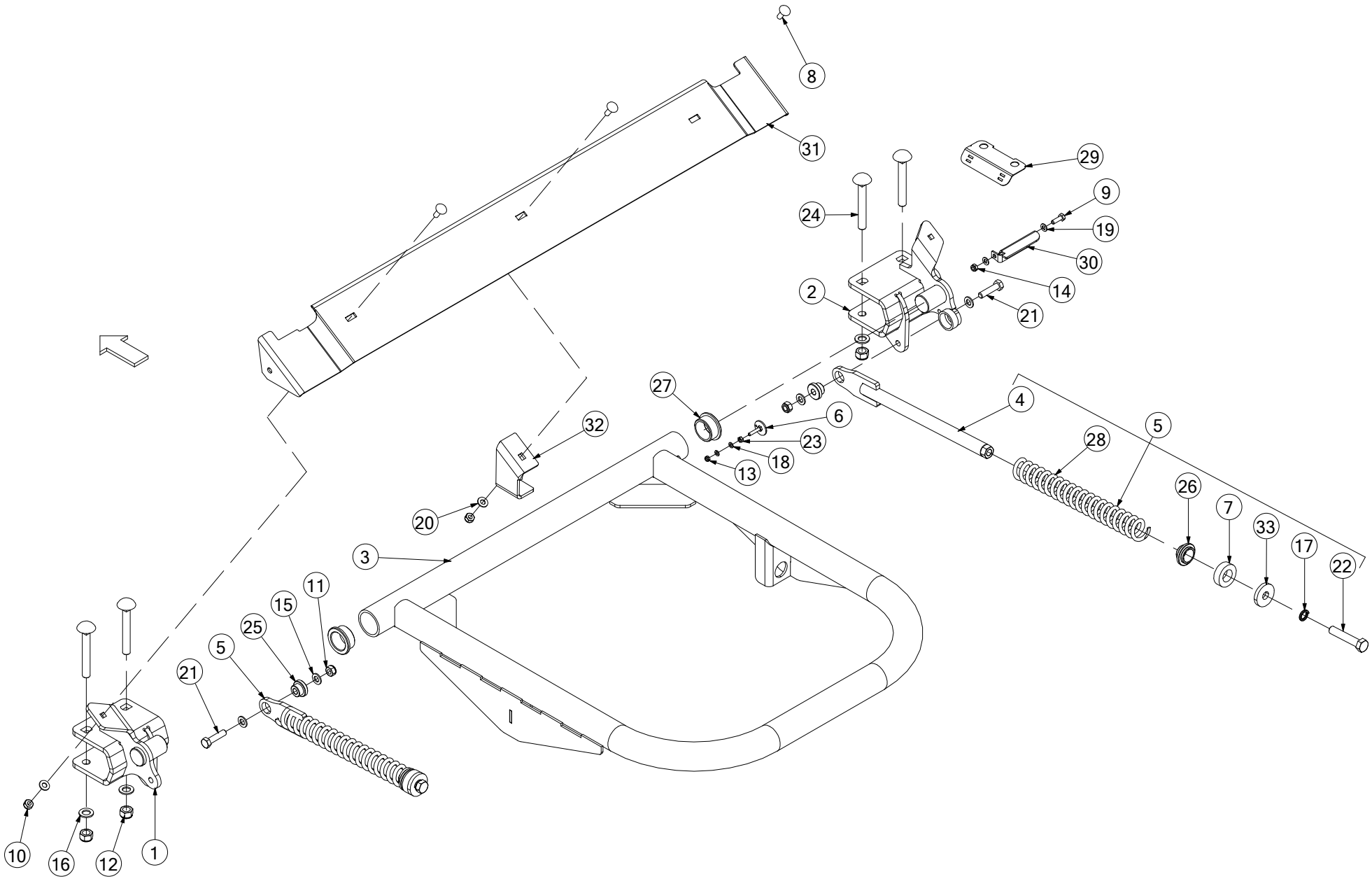

| No. | Part No | Description | Qty |
|---|---|---|---|
| 1 | ACH01208 | BALE DAMPER BRACKET LHS F550 | 1 |
| 2 | ACH01209 | BALE DAMPER BRACKET RHS F550 | 1 |
| 3 | ALA00358 | BALE DROPPER FRAME | 1 |
| 4 | ALA00404 | SPRING TUBE ASSEMBLY | 2 |
| 5 | ALA00405 | SPRING ASSEMBLY BALE DAMPER | 2 |
| *INCLUDES ITEMS 4, 7, 17, 22, 26, 28 & 33* | | | |
| 6 | ALA00675 | BALE KICKER SENSOR TARGET | 1 |
| *F5600 ONLY* | | | |
| 7 | CBE00169 | BUFFER 27X50X15 | 2 |
| 8 | CFA00017 | SETSCREW M10X30 CUP SQ Z/P | 3 |
| 9 | CFA00102 | SETSCREW M8X25 Z/P | 1 |
| 10 | CFA00123 | NUT M10 NYLOC | 3 |
| 11 | CFA00124 | NUT M12 NYLOC | 2 |
| 12 | CFA00128 | NUT M16 NYLOC | 4 |
| 13 | CFA00131 | NUT M6 NYLOC | 1 |
| 14 | CFA00132 | NUT M8 NYLOC Z/P | 1 |
| 15 | CFA00138 | WASHER FLAT 12MM Z/P | 4 |
| 16 | CFA00140 | WASHER FLAT 16MM Z/P | 4 |
| 17 | CFA00142 | WASHER SPRING 16MM Z/P | 2 |
| 18 | CFA00144 | WASHER FLAT 6MM Z/P | 2 |
| 19 | CFA00147 | WASHER FLAT 8MM Z/P | 2 |
| 20 | CFA00201 | WASHER FLAT 10 MM Z/P | 3 |
| 21 | CFA00272 | BOLT M12X50 Z/P | 2 |
| 22 | CFA00332 | SETSCREW M16X85 Z/P | 2 |
| 23 | CFA00473 | NUT M6 STD Z/P | 1 |
| 24 | CFA02267 | BOLT M16X120 CUPHEAD SQ Z/P | 4 |
| 25 | CMH00771 | BUSH 12X35 STEPPED | 2 |
| 26 | CMH01243 | BUSH 29X60X27 NYLON | 2 |
| 27 | CMH02363 | BALE DAMPER MACHINED BUSH | 2 |
| 28 | CSG00053 | SPRING COMP 7.62X31.5X45X360 | 2 |
| 29 | CZB04471 | BALE KICKER PROXIMITY WIRE GUARD | 1 |
| *F5600 ONLY* | | | |
| 30 | CZC04828 | BALE KICKER PROXIMITY BRACKET | 1 |
| *F5600 ONLY* | | | |
| 31 | CZD04984 | 4MM L AXLE CLEANER PLATE EXT | 1 |
| *REPLACES CZD04537* | | | |
| 32 | CZF06142 | 6MM AXLE CLEANER PLATE SUPPORT | 1 |
| 33 | CZG02173 | 8MM L WASHER PART ST | 2 |

| No. | Part No | Description | Qty |
|---|---|---|---|

## *Axle & wheels (749)*

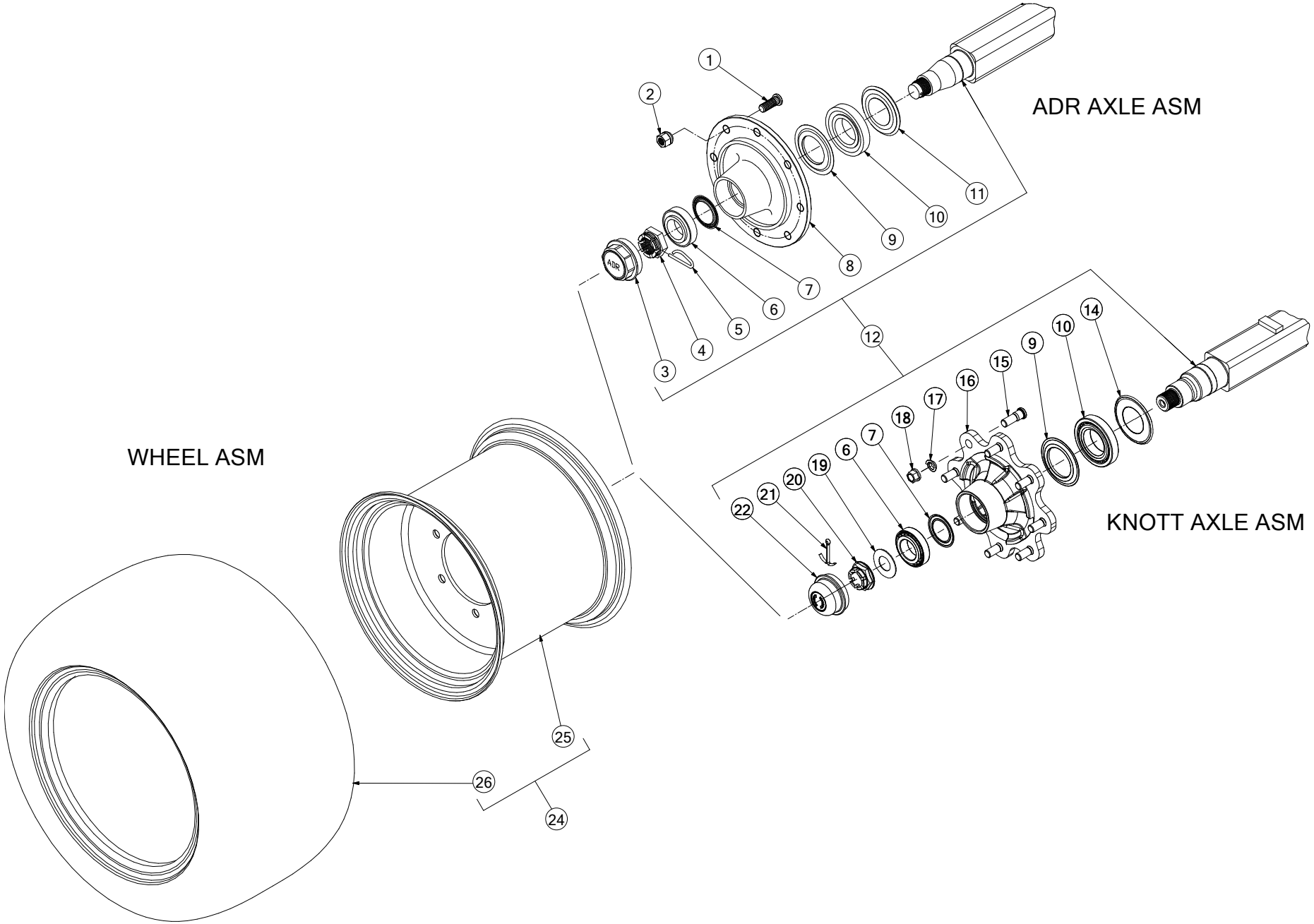

| No. | Part No | Description | Qty |
|---|---|---|---|
| 1 | CAX00208 | STUD M18X1.5X55 ADR HUB | 16 |
| 2 | CFA00121 | M18 WHEEL NUT ADR | 16 |
| 3 | CAX00080 | HUB CAP ADR FOR CAX00063 | 2 |
| 4 | CFA00751 | CASTLE NUT ADR FOR CAX00063 | 2 |
| 5 | CFA00750 | LOCKING PIN ADR | 2 |
| 6 | CBR00262 | TAPER ROLLER BEARING 32210 | 2 |
| 7 | CBR00261 | NILOS SEAL 1 AXLE CAX00063 | 2 |
| 8 | CAX00065 | HUB ADR 8 STUD CAX00063 | 2 |
| 9 | CBR00263 | NILOS SEAL 2 AXLE CAX00063 | 2 |
| 10 | CBR00064 | TAPER ROLLER BEARING 30213 | 2 |
| 11 | CSE00143 | OIL SEAL ADR AXLE CAX00063 | 2 |
| 12 | CAX00204 | KNOTT QSTE460N MATERIAL ST AXLE ASSY<br>*REPLACES CAX00063 & CAX00148 (WHICH CAN STILL BE USED ON F5 SERIES MACHINES)* | 1 |
| 12a | UWP00300 | CAX00063 / CAX00148 / CAX00204 AXLE HUB UPDATE KIT<br>*UPGRADE SEAL & BEARING KIT (INCLUDES ITEMS 3, 6, 7, 9, 10, 11 & EXTERNAL METAL SHIELD CTP00723)* | 1 |
| 14 | CSE00614 | OIL SEAL KNOTT 6B6846.001 | 2 |
| 15 | CFA00965 | WHEEL STUD M18X1.5X52 KNOTT 6X0039.009 | 16 |
| 16 | CAX00150 | HUB 8 STUD KNOTT 6B6595.110<br>*INCLUDES ITEMS 6, 7, 9, 10, 15 & 22* | 2 |
| 17 | CAX00057 | WASHER FOR AXLE B80L030D/S | 16 |
| 18 | CAX00161 | NUT M18X1.5X24AF AXLE KNOTT 6X0883.001 | 16 |
| 19 | CFA00963 | WASHER ⌀36X⌀70 KNOTT 6B7216.001 | 2 |
| 20 | CFA00964 | CASTLE NUT M36X1.5 KNOTT 6B7217.001 | 2 |
| 21 | CFA00410 | SPLIT PIN 6X90 | 2 |
| 22 | CAX00151 | HUB CAP ⌀90 KNOTT 408440.001 | 2 |
| 0 | 0 | 0 | 0 |
| 24 | CWH00051 | WHEEL ASY 500/50-17 VREDESTEIN FLO+<br>*(INCLUDES ITEMS 25 & 26)* | 2 |
| 25 | CWH00073 | RIM 16.00X17 FOR 500/50-17 VREDESTEIN FLO+ | 2 |
| 26 | CWH00064 | TYRE 500/50-17 VREDESTEIN FLO+ | 2 |
| 0 | 0 | 0 | 0 |
| 24 | CWH00083 | WHEEL ASY 460/65-20 VREDESTEIN FLO+<br>*(INCLUDES ITEMS 25 & 26)* | 2 |
| 25 | CWH00085 | RIM 14X20 (8 STUD -35 OFFSET)<br>*REPLACES CWH00265* | 2 |
| 26 | CWH00264 | TYRE 460/65-20 VERDESTEIN FLO+ | 2 |
| 0 | 0 | 0 | 0 |
| 24 | CWH00058 | WHEEL ASY 500/50-22.5 BKT<br>*(INCLUDES ITEMS 25 & 26)* | 2 |
| 25 | CWH00066 | RIM 16X22.5 (8-STUD -50 OFFSET) | 2 |
| 26 | CWH00067 | TYRE 500/50-22.5 FLOTATION-648 BKT | 2 |
| 0 | 0 | 0 | 0 |
| 24 | CWH00087 | WHEEL ASSY 520/55R22.5 FLOTATION TRAC<br>*(INCLUDES ITEMS 25 & 26)* | 2 |
| 25 | CWH00066 | RIM 16X22.5 (8-STUD -50 OFFSET) | 2 |
| 26 | CWH00280 | 520/55R22.5 VREDESTEIN FLOTATION TRAC | 2 |
| 0 | 0 | 0 | 0 |
| 24 | CWH00069 | WHEEL ASY 16/70-20 BKT TRACTOR GRIP<br>*(INCLUDES ITEMS 25 & 26)* | 2 |
| 25 | CWH00085 | RIM 14X20 (8 STUD -35 OFFSET) | 2 |

| No. | Part No | Description | Qty |
|---|---|---|---|
| 26 | CWH00084 | TYRE 16/70-20 BKT TRACTOR GRIP | 2 |

## *Axle braked (838)*

BEFORE SELECTING INDIVIDUAL COMPONENTS

1. CHECK CORRECT MAKE OF AXLE (FAD/ KNOTT) &
2. CHECK CORRECT SIZE OF BRAKES (60MM/ 90MM)

| | | |
|---|---|---|
| (X) SHOE WIDTH (MM) | 60 (x ø300) | 90 (x ø300) |
| (Y) HUB WIDTH (MM) | 70 Approx | 115 Approx |

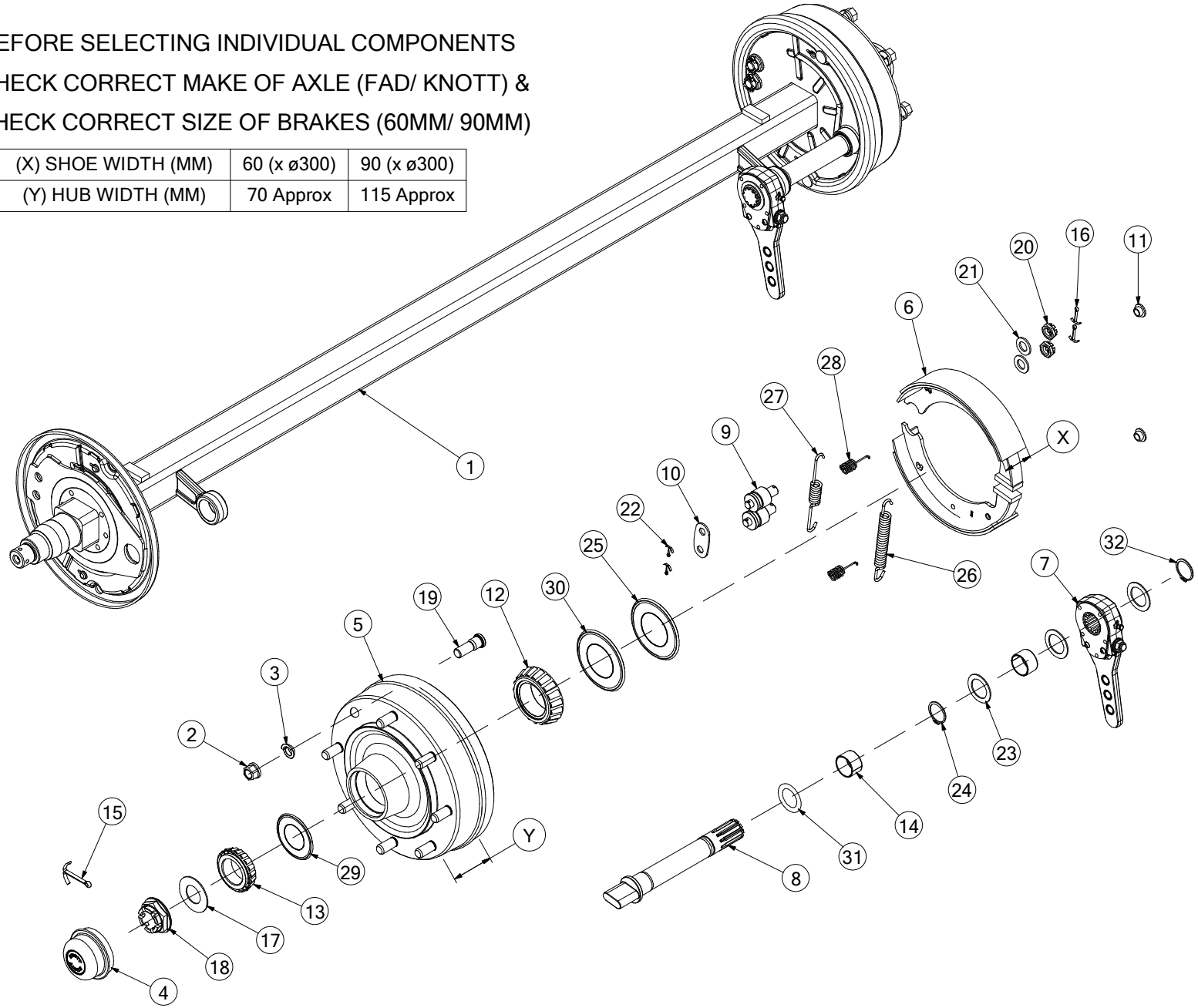

| No. | Part No | Description | Qty |
|---|---|---|---|
| 1 | CAX00114 | AXLE BRAK 8 STUD 70X300X60 FAD<br>*(300X60) COMPLETE FAD AXLE ASM USED ON F5 SERIES MACHINES ONLY* | 1 |
| 1 | CAX00196 | AXLE BRAKE 8 STUD 70X300X90 FAD<br>*(300X90) COMPLETE FAD AXLE ASM USED ON V6 SERIES MACHINES ONLY* | 1 |
| 2 | CAX00056 | NUT M18X1.5 AXLE B80L030D/S<br>*FAD AXLE ONLY* | 16 |
| 2 | CAX00161 | NUT M18X1.5X24AF AXLE KNOTT 6X0883.001<br>*KNOTT AXLE ONLY* | 16 |
| 3 | CAX00057 | WASHER 18MM AXLE B80L030D/S | 16 |
| 4 | CAX00025 | HUB CAP 998 FAD<br>*FAD AXLE ONLY* | 2 |
| 4 | CAX00151 | HUB CAP KNOTT 408440.001<br>*KNOTT AXLE ONLY* | 2 |
| 5 | CAX00133 | HUB ASSEMBLY FAD AXLE BRAKED<br>*(300X60) FAD AXLE ONLY (INCLUDES ITEMS 12, 13 & 19) HUB WIDTH IS 70MM APPROX* | 2 |
| 5 | CAX00201 | HUB ASSEMBLY FAD AXLE AIR-BRAKE CAX00196<br>*(300X90) FAD AXLE ONLY (INCLUDES ITEMS 12, 13 & 19) HUB WIDTH IS 115MM APPROX* | 2 |
| 5 | CAX00155 | HUB ASM BRAKE KNOTT 6B6597.100<br>*KNOTT AXLE ONLY (INCLUDES ITEMS 4, 12, 13 & 19) HUB WIDTH IS 70MM APPROX* | 2 |
| 6 | CAX00131 | BRAKE SHOE ASM 300X60 FAD AXLE<br>*(300X60) FAD AXLE ONLY (INCLUDES SPRINGS)* | 2 |
| 6 | CAX00112 | BRAKE SHOE ASM 300X90 316A040C<br>*(300X90) FAD AXLE ONLY (INCLUDES SPRINGS)* | 2 |
| 6 | CAX00156 | SHOE ASM BRAKE KNOTT 25719.01<br>*(300X60) KNOTT AXLE ONLY* | 2 |
| 7 | CAX00132 | ADJUSTABLE BRAKE LEVER FAD F5/V6<br>*FAD AXLE ONLY* | 2 |
| 7 | CAX00157 | BRAKE LEVER ADJ KNOTT 6B7462.001<br>*KNOTT AXLE ONLY* | 2 |
| 8 | CAX00130 | SHORT CAM SHAFT FAD AXLE BRAKED<br>*(300X60) FAD AXLE ONLY* | 2 |
| 8 | CAX00202 | CAMSHAFT FAD AXLE AIR-BRAKE CAX00196<br>*(300X90) FAD AXLE ONLY* | 2 |
| 8 | CAX00158 | CAMSHAFT BRAKE KNOTT 6B7205.001<br>*(300X60) KNOTT AXLE ONLY* | 2 |
| 9 | CAX00159 | SHOE PIVOT BRAKE KNOTT 6B7213.001<br>*KNOTT AXLE ONLY* | 4 |
| 10 | CAX00160 | PLATE PIVOT BRAKE KNOTT 6B7214.001<br>*KNOTT AXLE ONLY* | 2 |
| 11 | CBC00159 | CAP PLASTIC INSERT BRAKE KNOTT 44559.11<br>*KNOTT AXLE ONLY* | 4 |
| 12 | CBR00119 | BEARING TAPER 32213 (65X120X33) | 2 |
| 13 | CBR00262 | BEARING TAPER 32210 (50X90X25)<br>*(300X60) FAD & KNOTT AXLES ONLY* | 2 |
| 13 | CBR00323 | BEARING TAPER 33011 (55X90X27)<br>*(300X90) FAD AXLE ONLY* | 2 |
| 14 | CAX00190 | SLEEVE FAD BRAKED AXL 349F0341<br>*FAD AXLE ONLY* | 2 |
| 14 | CBR00301 | BEARING INSERT KNOTT 6B7212.001<br>*KNOTT AXLE ONLY* | 4 |
| 15 | CFA00410 | SPLIT PIN 6X90 | 2 |
| 16 | CFA00322 | SPLIT PIN 3X50 Z/P<br>*FAD AXLE ONLY* | 2 |
| 16 | CFA00450 | SPLIT PIN 4X36 ZP<br>*KNOTT AXLE ONLY* | 4 |
| 17 | CFA00963 | WASHER ⌀36X⌀70 KNOTT 6B7216.001<br>*KNOTT AXLE ONLY* | 2 |
| 18 | CAX00023 | NUT CASTLE 998 FAD<br>*(300X60) FAD AXLE ONLY* | 2 |
| 18 | CAX00059 | HUB NUT (B80L030D/S) 328F014<br>*(300X90) FAD AXLE ONLY* | 2 |
| 18 | CFA00964 | CASTLE NUT M36X1.5 KNOTT 6B7217.001<br>*(300X60) KNOTT AXLE ONLY* | 2 |
| 19 | CFA00235 | WHEEL STUD M18X1.5 F<br>*(300X60) FAD AXLE ONLY* | 16 |
| 19 | CAX00055 | STUD FOR AXLE B80L030D/S<br>*(300X90) FAD AXLE ONLY* | 16 |
| 19 | CFA00235 | WHEEL STUD M18X1.5 F<br>*(300X60) KNOTT AXLE ONLY* | 16 |
| 20 | CAX00194 | NUT CASTLE M18X1.5 BRAKE 328F002<br>*FAD AXLE ONLY* | 2 |
| 20 | CFA00985 | CASTLE NUT M18X1.5 KNOTT 6X0935 | 4 |
| 21 | CAX00193 | WASHER 17X30X1.6 BRAKE 329F011<br>*FAD AXLE ONLY* | 2 |
| 21 | CFA00986 | LOCKWASHER M18 KNOTT 6X0125A015 | 4 |
| 22 | CFA00987 | SPLIT PIN 3.2X20 KNOTT 6X0094.002<br>*KNOTT AXLE ONLY* | 4 |
| 23 | CFA00988 | WASHER FLAT 38.2X56 KNOTT 6B7232.001<br>*KNOTT AXLE ONLY* | 6 |
| 24 | CAX00189 | CIRCLIP FAD BRAKED AXL 341F043<br>*FAD AXLE ONLY* | 2 |
| 24 | CFA00989 | CIRCLIP 38MM EXTERNAL KNOTT 6X0471.035<br>*KNOTT AXLE ONLY* | 4 |
| 25 | CSE00144 | LIP SEAL 30213 (AXLE CAX077)<br>*FAD AXLE ONLY* | 2 |
| 25 | CSE00614 | OIL SEAL KNOTT 6B6846.001<br>*KNOTT AXLE ONLY* | 2 |
| 26 | CAX00186 | SPRING LOWER FAD BRAKE 322F006 | 2 |
| 26 | CSG00276 | SPRING EXT BRAKE KNOTT 41531 | 2 |
| 27 | CAX00185 | SPRING UPPER FAD BRAKE 322F005 | 2 |
| 27 | CSG00277 | SPRING EXT BRAKE KNOTT 44548 | 2 |
| 28 | CSG00278 | SPRING RETAINING BRAKE KNOTT 45873.08<br>*KNOTT AXLE ONLY* | 4 |
| 29 | CBR00324 | NILOS SEAL FOR BEARING 33011 (55X90)<br>*(300X90) FAD AXLE ONLY* | 2 |
| 30 | CBR00325 | NILOS SEAL FOR BEARING 32213 (65X120)<br>*FAD AXLE ONLY* | 2 |
| 31 | CAX00187 | O RING FAD BRAKED AXLE 341F069<br>*FAD AXLE ONLY* | 2 |
| 32 | CAX00192 | CIRCLIP FAD BRAKED AXL 341F044<br>*FAD AXLE ONLY* | 2 |
| 32 | CFA00989 | CIRCLIP 38MM EXTERNAL KNOTT 6X0471.035<br>*KNOTT AXLE ONLY* | 2 |

## *Axle brake actuator brackets (754)*

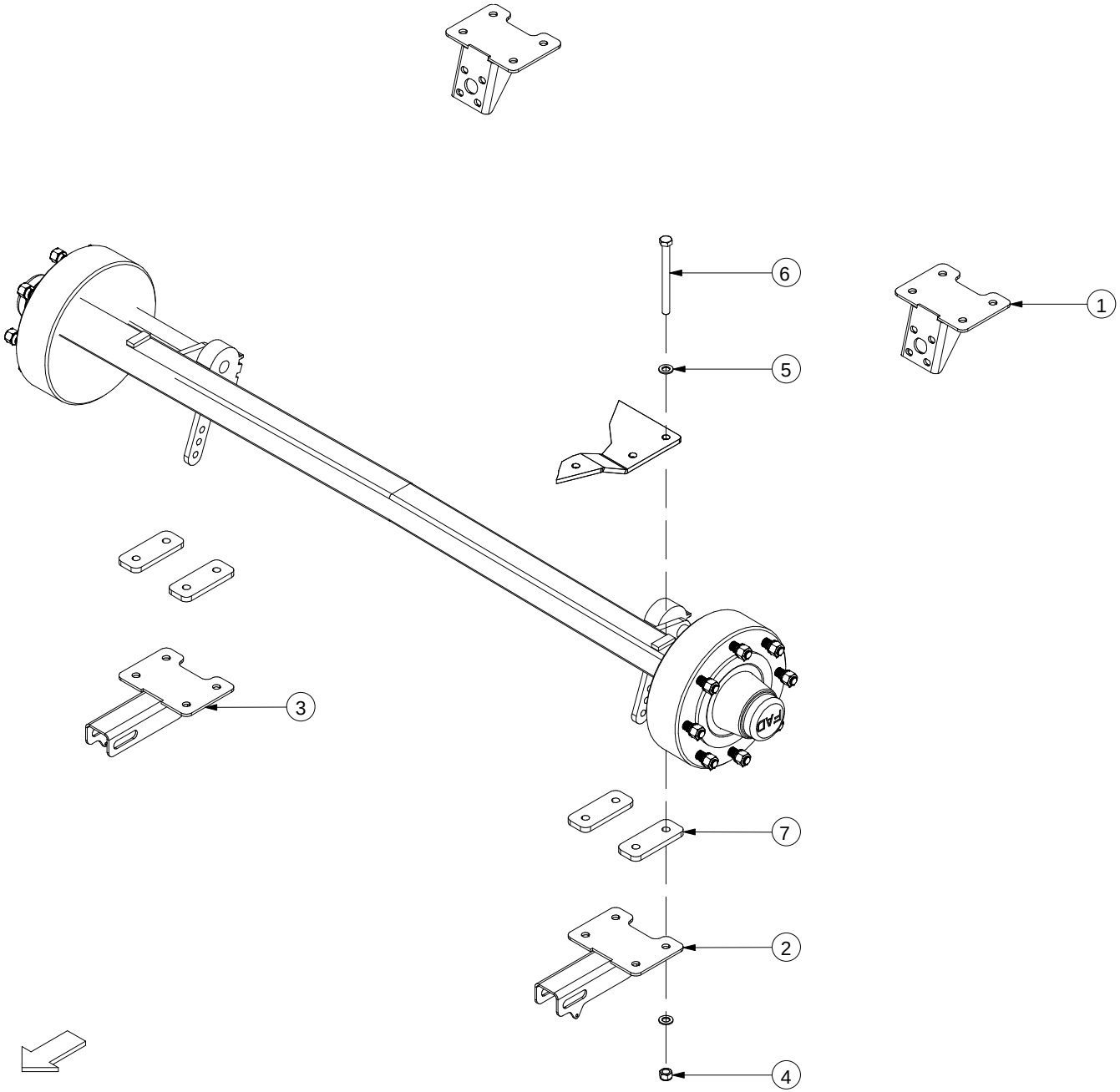

| No. | Part No | Description | Qty |
|---|---|---|---|
| 1 | ACH00688 | AIR BRAKE AXLE PLATE ASSY | 2 |
| *AIR BRAKES* | | | |
| 2 | ACH00689 | HYD BRAKE AXLE PLATE ASSY | 1 |
| *HYDRAULIC BRAKES* | | | |
| 3 | ACH00693 | HYD BRAKE BRACKET F5 RHS | 1 |
| *HYDRAULIC BRAKES* | | | |
| 4 | CFA00128 | NUT M16 NYLOC | 12 |
| 5 | CFA00140 | WASHER FLAT 16MM Z/P | 24 |
| 6 | CFA00968 | BOLT M16 X 140 Z/P DIN 931 GRADE 10.9 | 8 |
| *BRAKED AXLE (REPLACES CFA00929)* | | | |
| 7 | CZI02048 | 12MM L AXLE MOUNT PLATE F5 | 4 |

| No. | Part No | Description | Qty |
|---|---|---|---|

# Handbrake F5000 (847)

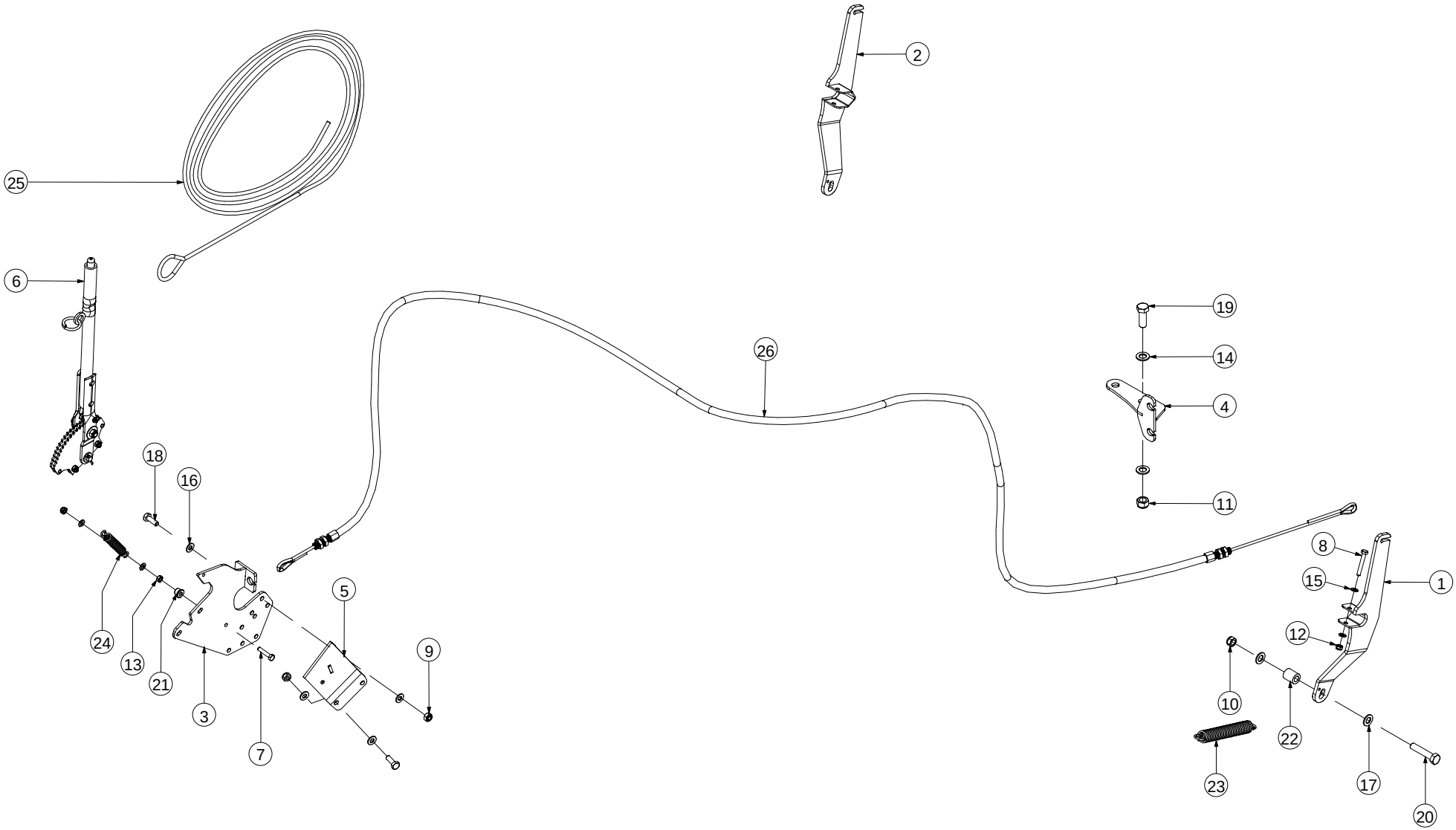

| No. | Part No | Description | Qty |
|---|---|---|---|
| 0 | CAX00139 | HANDBRAKE KIT COMPLETE ASSY F5000 | 1 |
| *(INCLUDES ITEMS 1 THROUGH 26)* | | | |
| 1 | ABD00059 | HANDBRAKE LEVER LH F5 SERIES | 1 |
| 2 | ABD00060 | HANDBRAKE LEVER RH F5 SERIES | 1 |
| 3 | ADB00143 | HANDBRAKE BRACKET ASSY | 1 |
| 4 | ADB00147 | HANDBRAKE BRACKET ASSEMBLY | 2 |
| 5 | ADB00127 | HANDBRAKE BRACKET F5 | 1 |
| 6 | CAX00090 | HAND BRAKE LEVER | 1 |
| 7 | CFA00100 | BOLT M8X40 Z/P | 1 |
| 8 | CFA00108 | BOLT M8X55 Z/P | 2 |
| 9 | CFA00123 | NUT M10 NYLOC | 5 |
| 10 | CFA00126 | NUT M14 NYLOC | 2 |
| 11 | CFA00128 | NUT M16 NYLOC | 4 |
| 12 | CFA00132 | NUT M8 NYLOC Z/P | 3 |
| 13 | CFA00133 | NUT M8 Z/P | 1 |
| 14 | CFA00140 | WASHER FLAT 16MM Z/P | 8 |
| 15 | CFA00147 | WASHER FLAT 8MM Z/P | 6 |
| 16 | CFA00201 | WASHER FLAT 10 MM Z/P | 6 |
| 17 | CFA00222 | WASHER FLAT 14MM Z/P | 4 |
| 18 | CFA00230 | SETSCREW M10X30 Z/P | 3 |
| 19 | CFA00282 | BOLT M16X45 | 4 |
| 20 | CFA00547 | BOLT M14X70 Z/P | 2 |
| 21 | CMH00742 | BUSH 8X20X13 ZINC PLATED | 1 |
| 22 | CMH02325 | BUSH 14X25X30 | 2 |
| 23 | CSG00208 | SPRING EXT 3.5X28X188X43 Z/P | 2 |
| 24 | CSG00211 | SRING COIL 3 X 19 X 135 27COILS | 1 |
| 25 | CTP00318 | BREAK AWAY ROPE FUSION 2 | 1 |
| 26 | CTP00346 | NEW HAND BRAKE CABLE F5/V6 SERIES | 2 |

| No. | Part No | Description | Qty |
|---|---|---|---|

## ***Air brake kit F5000 (764)***

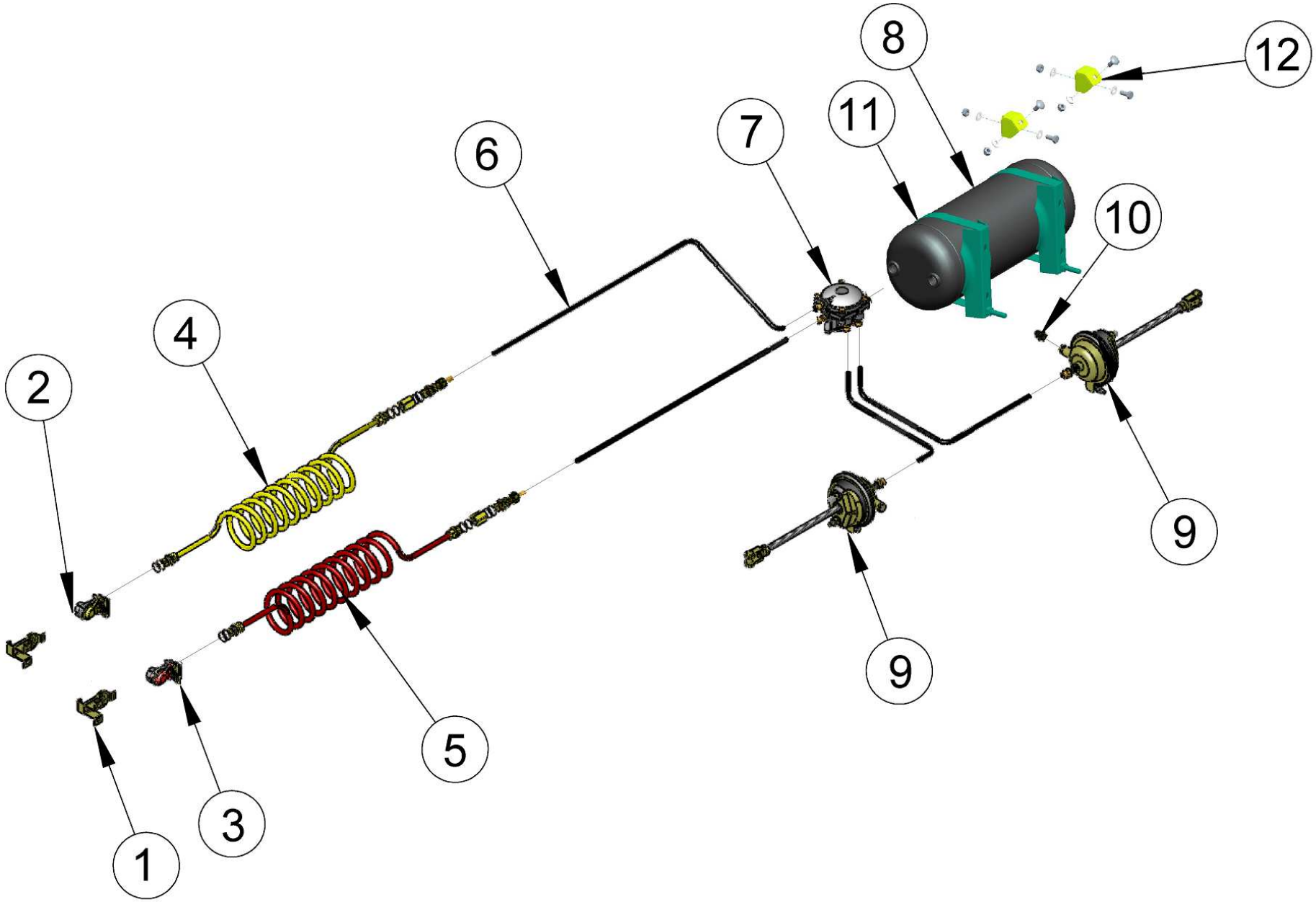

| No. | Part No | Description | Qty |
|---|---|---|---|
| 1 | CVA00328 | COUPLER BRACKET | 2 |
| 2 | CVA00126 | AIR BRAKE QUICK FIT COUPLING YELLOW | 1 |
| 3 | CVA00127 | AIR BRAKE QUICK FIT BRK RED | 1 |
| 4 | CHY02557 | SERVICE SUZZIE (YELLOW) | 1 |
| 4a | CVA10039 | M22 THRUST WASHER TRACTAIR | 3 |
| 4b | CVA10038 | M22 O RING TRACTAIR | 3 |
| 5 | CHY02558 | EMERGENCY SUZZIE (R) | 1 |
| 5a | CVA10039 | M22 THRUST WASHER TRACTAIR | 3 |
| 5b | CVA10038 | M22 O RING TRACTAIR | 3 |
| 6 | CHY02559 | 10MM O/D NYLON AIR BRAKE HOSE | AR |
| 6a | CVA10034 | 7MM INSERT TRACTAIR (10MMTUBE) | 2 |
| 6b | CVA10036 | M22 - M16 BULKHEAD 10MM ASMBLY | 2 |
| 6c | CVA10035 | M22 FEM-FEM ADAPTOR TRACTAIR | 2 |
| 7 | CHY02605 | CONTROL VALVE AIR BRAKE KIT [TRACTAIR] | 1 |
| 7a | CVA10032 | 1/4 TAPER 10MM ST PUSHFIT ADAPTOR | 4 |
| 8 | CVA10033 | AIR BRAKE TANK 15LTR | 1 |
| *TANK (WAS CVA00324 10LTR)* | | | |
| 9 | CVA00124 | AIR BRAKE ACTUATATOR FUSION 998 F5 | 2 |
| 9a | CVA10031 | M16 10MM PUSH ADAPTOR AIR BRAKE | 2 |
| 10 | CVA00327 | AIR BRAKE M16 TEST POINT | 1 |
| 11 | CVA00325 | RESERVOIR SADDLE | 2 |
| *SADDLE BRACKET* | | | |
| 12 | CZC04606 | 3MM L AIR TANK STRAP BRACKET F5000 | 2 |
| *MTG BRACKET* | | | |
| 13 | CFA00024 | SETSCREW M10X25 ZP | 2 |
| 14 | CFA00442 | BOLT M10X25 CUP SQ. Z/P | 2 |
| 15 | CFA00123 | NUT M10 NYLOC | 4 |
| 16 | CFA00201 | WASHER FLAT 10 MM Z/P | 6 |

| No. | Part No | Description | Qty |
|---|---|---|---|

## ***Chains & Belts (751)***

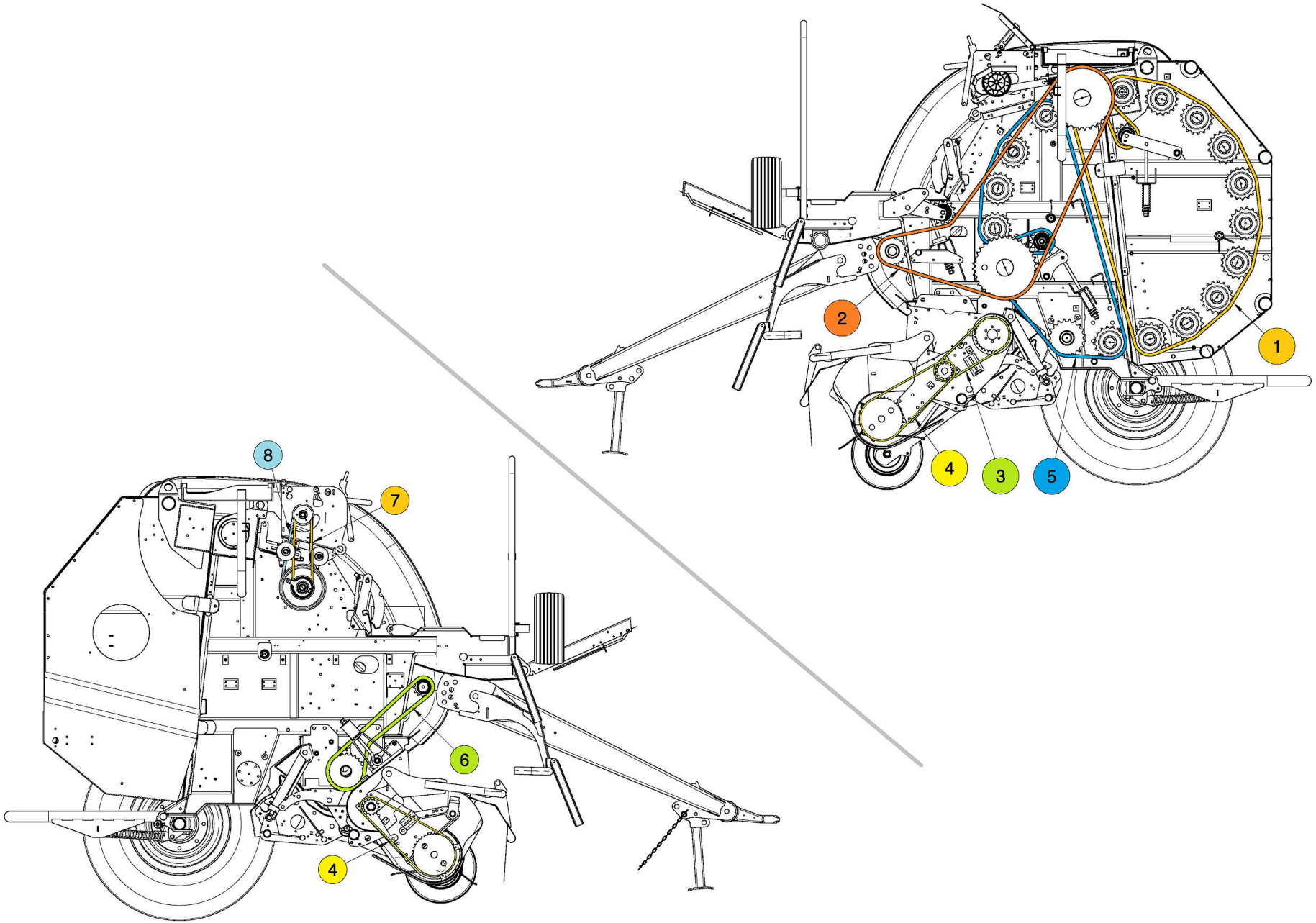

| No. | Part No | Description | Qty |
|---|---|---|---|
| 0 | CCH00056 | CHAIN KIT COMPLETE F5 RANGE | 1 |
| *COMPLETE SET OF CHAINS (INCLUDES ITEMS 1 THROUGH 6) WITH CAM-TRACK VERSION ITEM 4* | | | |
| 1 | CCH00049 | 20B 158 PITCHES + CON LINK | 1 |
| 1a | CCH00031 | CHAIN LINK CONN 20B 1 1/4 | 1 |
| 1b | CCH00032 | CHAIN LINK OFFSET 20B 1 1/4 | 1 |
| 2 | CCH00052 | 100H 126 PITCHES+CON | 1 |
| 2a | CCH00045 | CHAIN LINK CONN ASA 100H 1" | 1 |
| 2b | CCH00053 | CHAIN LINK OFFSET ASA 100H 1" | 1 |
| 3 | CCH02025 | SLIP-CLUTCH CHAIN ASA60H 3/4" 62 INC LINK | 1 |
| *(IF AUGER SPROCKET IS 19T USE AS IS & IF AUGER SPROCKET IS 15T REMOVE 2 LINKS)* | | | |
| 3a | CCH02021 | CHAIN LINK CONN ASA60H 3/4" | 1 |
| 3b | CCH02022 | CHAIN LINK OFFSET ASA60H 3/4" | 1 |
| 4 | CCH02026 | CHAIN ASA60H 3/4" 78 INC LINK | 2 |
| *CAM-TRACK PICK-UP ONLY (IF AUGER SPROCKET IS 19T USE AS IS & IF AUGER SPROCKET IS 15T REMOVE 2 LINKS)* | | | |
| 4a | CCH02021 | CHAIN LINK CONN ASA60H 3/4" | 1 |
| 4b | CCH02022 | CHAIN LINK OFFSET ASA60H 3/4" | 1 |
| 4 | CCH00195 | CHAIN ASA60H 3/4 76 P INC JOINERLINK | 2 |
| *CAM-LESS PICK-UP ONLY (IF AUGER SPROCKET IS 19T USE AS IS & IF AUGER SPROCKET IS 15T REMOVE 2 LINKS)* | | | |
| 4a | CCH02021 | CHAIN LINK CONN ASA60H 3/4" | 1 |
| 4b | CCH02022 | CHAIN LINK OFFSET ASA60H 3/4" | 1 |
| 5 | CCH02037 | 20B 136 LINKS INCL LINK | 1 |
| 5a | CCH00031 | CHAIN LINK CONN 20B 1 1/4 | 1 |
| 5b | CCH00032 | CHAIN LINK OFFSET 20B 1 1/4 | 1 |
| 6 | CCH00051 | 16B2 70 PITCHES + CON LINK | 1 |
| 6a | CCH02006 | CHAIN LINK CONN 1" DUPLEX 16B2 | 1 |
| 6b | CCH02007 | CHAIN LINK OFFSET 16B2 1"DUPX | 1 |
| 7 | CBE00214 | BELT V A44 F5 SERIES | 1 |
| *OUTER BELT - USED ON ALL F5 SERIES BALERS (EXCEPT F5600 PLUS)* | | | |
| 7 | CBE00371 | A46 V BELT | 1 |
| *USED ON F5600 PLUS MACHINES ONLY* | | | |
| 8 | CBE00219 | BELT SPB 1400 | 1 |
| *INNER BELT - USED WITH 224MM PULLEY UP TO SERIAL No 707899 (NOT USED ON F5600 PLUS MACHINES)* | | | |
| 8 | CBE00241 | BELT SPB 1450 | 1 |
| *INNER BELT - USED WITH 250MM PULLEY FROM SERIAL No 707900 (NOT USED ON F5600 PLUS MACHINES)* | | | |

| No. | Part No | Description | Qty |
|---|---|---|---|

## Panels (747)

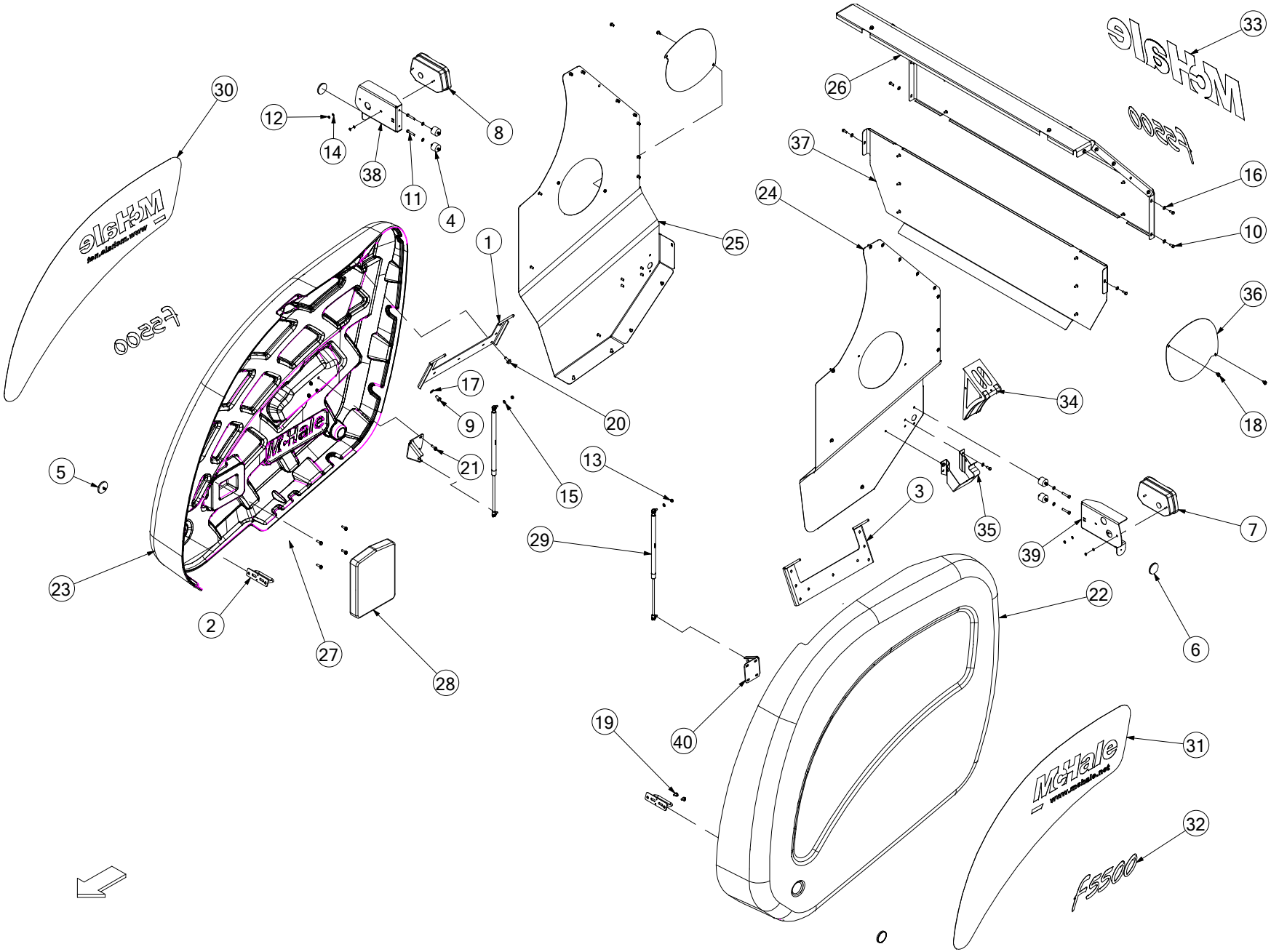

30
12
14
38
11
4
8
1
25
26
33
37
24
16
10
36
18
34
17
9
20
21
15
13
5
3
35
39
7
29
23
2
27
28
22
6
40
19
31
32
McHale
F5500

| No. | Part No | Description | Qty |
|---|---|---|---|
| 1 | ALA00413 | PANEL HINGE PLATE RHS ASSY | 1 |
| 2 | ALA00432 | DOOR LATCH ASSY | 2 |
| 3 | ALA00456 | PANEL HINGE PLATE LHS ASSY | 1 |
| 4 | CBE00228 | RUBBER BUFFER 70 SHORE | 4 |
| 5 | CEL00643 | ROUND AMBER REFLECTOR STICK-ON | 2 |
| *REPLACES BOLT ON TYPE CEL00239* | | | |
| 6 | CEL00643 | ROUND AMBER REFLECTOR STICK-ON | 2 |
| 7 | CEL00700 | LIGHT F555 BACK LHS | 1 |
| 8 | CEL00701 | LIGHT F555 BACK RHS | 1 |
| 9 | CFA00023 | SETSCREW M10X20 Z/P | 2 |
| 10 | CFA00052 | SETSCREW M8X20 Z/P | 51 |
| 11 | CFA00106 | BOLT M8X45 Z/P | 4 |
| 12 | CFA00131 | NUT M6 NYLOC | 4 |
| 13 | CFA00132 | NUT M8 NYLOC Z/P | 2 |
| 14 | CFA00144 | WASHER FLAT 6MM Z/P | 4 |
| 15 | CFA00147 | WASHER FLAT 8MM Z/P | 13 |
| 16 | CFA00249 | WASHER SKM8 | 44 |
| 17 | CFA00251 | WASHER SKM10 | 2 |
| 18 | CFA00492 | SETSCREW M8X12 FLANGED Z/P | 4 |
| 19 | CFA00519 | SETSCREW M8X16 FLD ZP | 4 |
| 20 | CFA00520 | SETSCREW M10X25 FLD ZP | 16 |
| 21 | CFA02219 | SETSCREW M8X25 FLD ZP | 12 |
| 22 | CGD00175 | PANEL F5 LHS | 1 |
| *INCLUDES DECALS ITEMS 31 & 32 (SPECIFY MODEL WHEN ORDERING)* | | | |
| 23 | CGD00217 | PANEL F5 RHS | 1 |
| *INCLUDES DECALS ITEMS 30 & 32 (SPECIFY MODEL WHEN ORDERING)* | | | |
| 24 | CGD00238 | F5 BACK DOOR LHS SIDE PANEL | 1 |
| 25 | CGD00239 | F5 BACK DOOR RHS SIDE PANEL | 1 |
| 26 | CGD00266 | BACK DOOR TOP GUARD F5 | 1 |
| 27 | CPL00100 | HANDLE DOOR F5 SERIES PANELS | 2 |
| *HANDLE NOT SHOWN* | | | |
| 28 | CPL00122 | OPERATORS MANUAL HOLDER | 1 |
| *USED UP TO SERIAL No 712582* | | | |
| 29 | CRA00677 | GAS STRUT 10/22 350 - 785 - 1100N | 2 |
| 30 | CST00679 | RECESS DECAL RHS F550 | 1 |
| 31 | CST00680 | RECESS DECAL LHS F550 | 1 |
| 32 | CST00709 | DECAL F5500 LOGO | 3 |
| 33 | CST00710 | DECAL MCHALE LOGO (BACK DOOR) | 1 |
| 34 | CTP00075 | PARKING CHOCKS BALE | 2 |
| 35 | CTP00076 | BRACKET FOR PARKING CHOCK | 2 |
| 36 | CZB02209 | 1.5MM L GUARD PART ST BALER | 2 |
| 37 | CZB04331 | 1.5MM L F5 BACK DOOR SKIN | 1 |
| 38 | CZC04479 | 3MM L RHS LIGHT BRACKET F555 | 1 |
| 39 | CZC04485 | 3MM L LHS LIGHT BRACKET F550 | 1 |
| 40 | CZD04334 | 4MM L GAS STRUT MOUNT PLATE | 2 |

| No. | Part No | Description | Qty |
|---|---|---|---|

## ***Front Chamber RHS (741)***

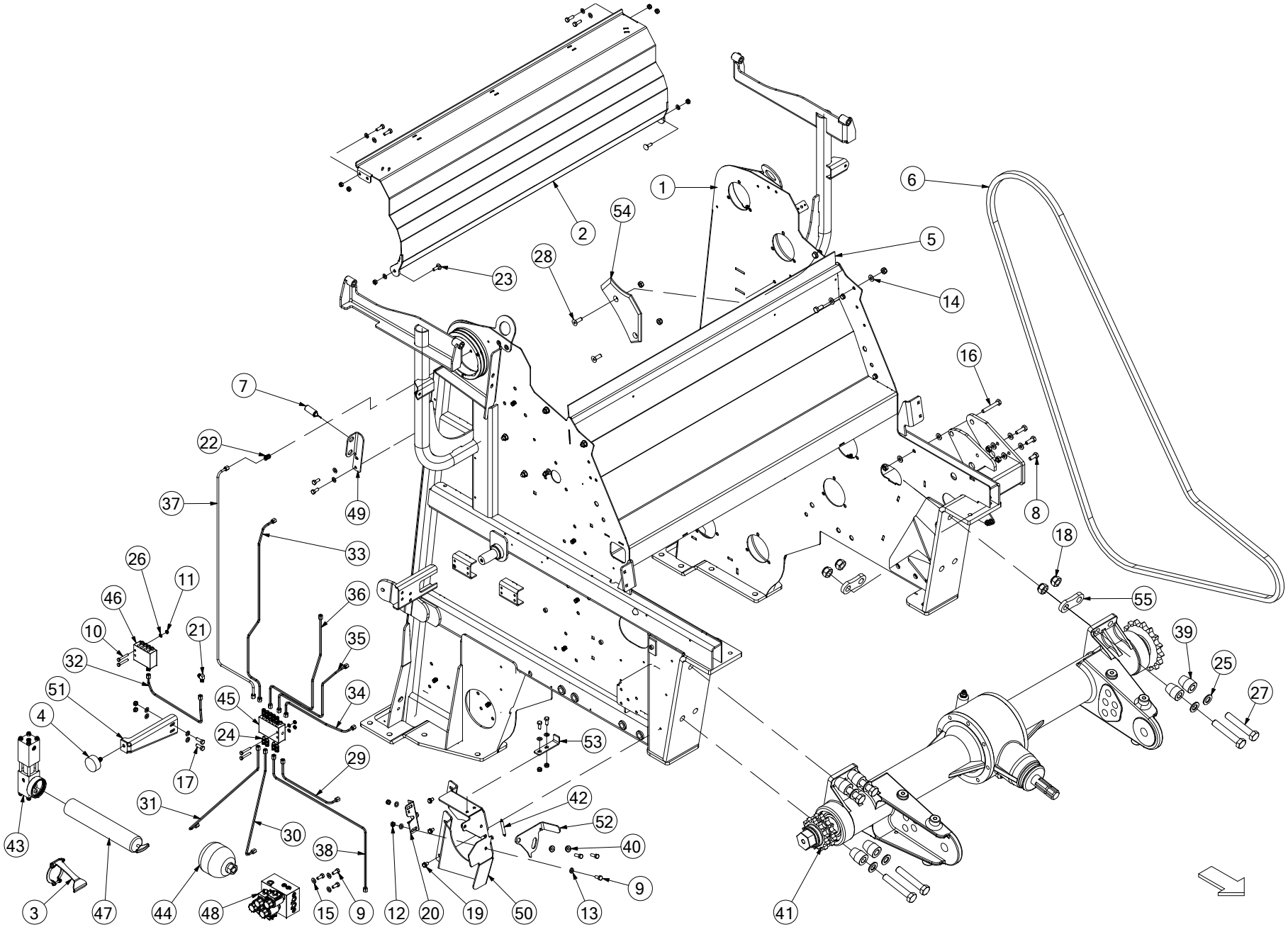

| No. | Part No | Description | Qty |
|---|---|---|---|
| 1 | ACH01055 | FRONT DOOR WELD ASSY F5 SERIES | 1 |
| 2 | ARC00286 | ROLLER GUARD ASSY F550 | 1 |
| 3 | ART00351 | GREASE GUN STOP ASSY | 1 |
| 4 | CBE00002 | BUFFER RUBBER 50X21 M10X28 | 2 |
| 5 | CBE00229 | RUBBER STRIP 1225X100X3 | 1 |
| 6 | CCH00052 | 100H 126 PITCHES+CON | 1 |
| 7 | CEL00616 | SENSOR ASSY PROXIMITY 18MM NPN | 1 |
| 8 | CFA00024 | SETSCREW M10X25 Z/P | 5 |
| 9 | CFA00052 | SETSCREW M8X20 Z/P | 14 |
| 10 | CFA00099 | SETSCREW M6X40 Z/P | 6 |
| 11 | CFA00131 | NUT M6 NYLOC | 6 |
| 12 | CFA00132 | NUT M8 NYLOC Z/P | 25 |
| 13 | CFA00147 | WASHER FLAT 8MM Z/P | 42 |
| 14 | CFA00201 | WASHER FLAT 10 MM Z/P | 19 |
| 15 | CFA00249 | WASHER SKM8 | 3 |
| 16 | CFA00383 | BOLT M10X70 Z/P | 2 |
| 17 | CFA00407 | BOLT M8X25 Z/P | 10 |
| 18 | CFA00418 | NUT M20X1.5 NYLOC FINE THRAED | 8 |
| 19 | CFA00492 | SETSCREW M8X12 FLANGED Z/P | 10 |
| 20 | CFA00518 | CAMLOC BALER DOOR | 1 |
| 21 | CFA00543 | 6MM X 1/8" 90? GREASE FITTING | 6 |
| 22 | CFA00549 | GREASE FITTING 6MM X 1/8 | 10 |
| 23 | CFA00591 | BOLT M8X25 CUP SQ Z/P | 2 |
| 24 | CVA00172 | VALVE CHECK 1/8 | 10 |
| 25 | CFA00781 | DIN6916 WASH M20 GRD295HV 10 PEINER | 8 |
| 26 | CFA00800 | WASHER M6 DIN125 NYLON | 6 |
| 27 | CFA00842 | BOLT M20X120X1.5 GRADE 8.8 DIN960 | 8 |
| 28 | CFA00908 | SETSCREW M10X25 CSK HEX Z/P | 4 |
| 29 | CHY02353 | GREASE PIPE 2 FRONT DOOR NDS | 1 |
| 30 | CHY02357 | GREASE PIPE 6 FRONT DOOR NDS | 1 |
| 31 | CHY02359 | GREASE PIPE 8 FRONT DOOR NDS | 1 |
| 32 | CHY02369 | GREASE PIPE MASTER-SECONDARY | 1 |
| 33 | CHY02489 | GREASE PIPE10 FRONT | 1 |
| 34 | CHY02490 | GREASE PIPE11 FRONT | 1 |
| 35 | CHY02491 | GREASE PIPE3 FRONT | 1 |
| 36 | CHY02492 | GREASE PIPE 5 FRONT DOOR NDS | 1 |
| 37 | CHY02623 | GREASE PIPE9 FRONT DOOR NDS F5 | 1 |
| 38 | CHY02624 | GREASE PIPE ROTOR BEARING F5 | 1 |
| 39 | CMH00976 | BUSH 16X40X50 | 8 |
| 40 | CMH01356 | BUSH 8X20X7.5 Z/P | 2 |
| 41 | CMT00106 | GEARBOX ASM ST BALER 540RPM SS | 1 |
| 41 | CMT00498 | GEARBOX 1000RPM HEAVY DUTY | 1 |
| *OPTIONAL* | | | |
| 42 | CSG00047 | SPRING EXT 1.2X8.5X59 | 1 |
| 43 | CVA00382 | PUMP GREASE ONLY FOR F5 BALER | 1 |
| *ROUND GREASE PUMP (REPLACES CVA00145 SQUARE GREASE PUMP SHOWN)* | | | |
| 44 | CVA00165 | ACCUMULATOR 0.5 LITRE 25 BAR | 1 |
| 45 | CVA00166 | GREASE BLOCK 10 WAY | 1 |
| 46 | CVA00167 | GREASE BLOCK 8 WAY MASTER | 1 |

| No. | Part No | Description | Qty |
|---|---|---|---|
| 47 | CVA00184 | GREASE GUN CARTRIDGE HOUSING | 1 |
| 47a | CSE00613 | SEAL GREASE CARTRIDGE | 1 |
| 48 | CVA00361 | VALVE CTRL FLOOR KNIVES V660 2011+ | 1 |
| 48a | CZC04735 | 3MM L TRANSDUCER SENSOR COVER PLATE | 1 |
| *TRANSDUCER SENSOR GUARD (NOT SHOWN)* | | | |
| 49 | CZD03001 | 4MM L PROXIMITY SWITCH BRCKT. | 1 |
| 50 | CZD04503 | 4MM L F5 DOOR LOCK BRCKT RHS | 1 |
| 51 | CZD04504 | 4MM L BUFFER MOUNT BRCKT | 2 |
| 52 | CZD04570 | 4MM PANEL LATCH F550 RHS | 1 |
| 53 | CZD04588 | 4MM L DOOR LOCK SUPPORT BRCKT F5 | 2 |
| 54 | CZH04588 | 10MM L CHAMBER NET PLATE LHS | 1 |
| 55 | CZI02044 | 12MM L CHASSIS PART FUSION | 4 |

## Front chamber LHS (742)

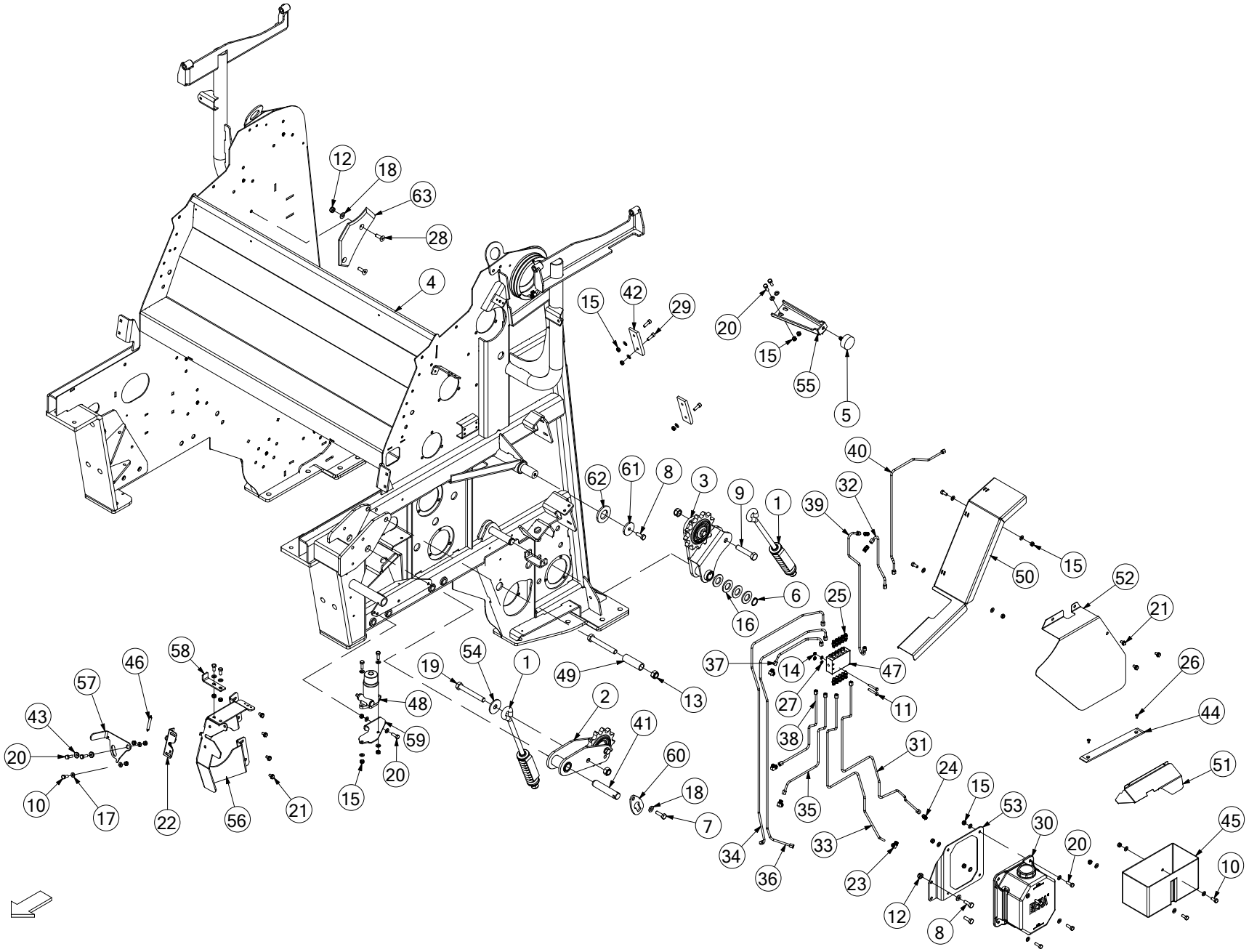

| No. | Part No | Description | Qty |
|---|---|---|---|
| 1 | ACH00437 | FRONT CHAIN ADJ COMPLETE | 2 |
| 2 | ACH00440 | CHAIN TENSIONER COMP ASSY M.D. | 1 |
| 3 | ACH00551 | CHAIN TENSIONER COMP ASSY | 1 |
| 4 | ACH01055 | FRONT DOOR WELD ASSY F5 SERIES | 1 |
| 5 | CBE00002 | BUFFER RUBBER 50X21 M10X28 | 2 |
| 6 | CFA00001 | CIRCLIP 25MM EXTERNAL Z/P | 1 |
| 7 | CFA00016 | BOLT M10X35 | 1 |
| 8 | CFA00025 | SETSCREW M10X30 | 4 |
| 9 | CFA00043 | BOLT M16X80 | 1 |
| 10 | CFA00052 | SETSCREW M8X20 Z/P | 9 |
| 11 | CFA00099 | SETSCREW M6X40 Z/P | 6 |
| 12 | CFA00123 | NUT M10 NYLOC | 4 |
| 13 | CFA00128 | NUT M16 NYLOC | 3 |
| 14 | CFA00131 | NUT M6 NYLOC | 6 |
| 15 | CFA00132 | NUT M8 NYLOC Z/P | 25 |
| 16 | CFA00135 | WASHER FLAT 1" Z/P | 4 |
| 17 | CFA00147 | WASHER FLAT 8MM Z/P | 46 |
| 18 | CFA00201 | WASHER FLAT 10 MM Z/P | 6 |
| 19 | CFA00209 | BOLT M16X120 Z/P | 2 |
| 20 | CFA00407 | BOLT M8X25 Z/P | 14 |
| 21 | CFA00492 | SETSCREW M8X12 FLANGED Z/P | 10 |
| 22 | CFA00518 | CAMLOC BALER DOOR | 1 |
| 23 | CFA00543 | 6MM X 1/8" 90? GREASE FITTING | 6 |
| 24 | CFA00549 | GREASE FITTING 6MM X 1/8" M/M | 10 |
| 25 | CFA00648 | GREASE FITTING TO BLOCK 1/8" | 10 |
| 26 | CFA00760 | SETSCREW M6X10 CSK Z/P DIN 7991 | 2 |
| 27 | CFA00800 | WASHER M6 DIN125 NYLON | 6 |
| 28 | CFA00908 | SETSCREW M10X25 CSK HEX Z/P | 2 |
| 29 | CFA00909 | BOLT M8X25 SOC CAP Z/P | 4 |
| 30 | CHY00868 | BEKA OIL TANK ASSY | 1 |
| 31 | CHY02361 | GREASE PIPE 2 FRONT | 1 |
| 32 | CHY02362 | GREASE PIPE 3 FRONT DOOR DS | 1 |
| 33 | CHY02363 | GREASE PIPE 4 FRONT DOOR DS | 1 |
| 34 | CHY02364 | GREASE PIPE 5 FRONT DOOR DS | 1 |
| 35 | CHY02365 | GREASE PIPE 6 FRONT DOOR DS | 1 |
| 36 | CHY02366 | GREASE PIPE 7 FRONT DOOR DS | 1 |
| 37 | CHY02367 | GREASE PIPE 8 FRONT DOOR DS | 1 |
| 38 | CHY02368 | GREASE PIPE 9 FRONT DOOR DS | 1 |
| 39 | CHY02486 | GREASE PIPE10 FRONT | 1 |
| 40 | KST00105 | GREASE PIPE 11 DOOR HINGE F5 KIT | 1 |
| *REPLACES CHY02487 GREASE PIPE11 FRONT* | | | |
| 41 | CMH00387 | PIN 25X120 MILLED FOR CAP Z/P | 1 |
| 42 | ALA00311 | WEAR STRIP ASSY CHAMBER DOOR | 2 |
| *INCLUDES M8 NUTS (REPLACES CMH00769)* | | | |
| 43 | CMH01356 | BUSH 8X20X7.5 Z/P | 2 |
| 44 | CMH01709 | WEAR STRIP 6X35X295 PLASTIC | 1 |
| *FROM SERIAL No 710296* | | | |
| 45 | CPL00045 | TOOLBOX PLAS 270X151X13 | 1 |
| 46 | CSG00047 | SPRING EXT 1.2X8.5X59 | 1 |

| No. | Part No | Description | Qty |
|---|---|---|---|
| 47 | CVA00166 | GREASE BLOCK 10 WAY | 1 |
| *F5500 & F5600 MODELS ONLY* | | | |
| 47 | CVA00567 | GREASE BLOCK 10 WAY (MANUAL) | 1 |
| *F5400 & F5400c MODELS ONLY* | | | |
| 47a | CFA00590 | GREASE NIPPLE 1/8 BSP ST | 10 |
| *F5400 & F5400c MODELS ONLY* | | | |
| 48 | CVA00564 | BEKA OIL PUMP | 1 |
| 49 | CXT00291 | TUBE 26.9X83 | 1 |
| 50 | CZB04337 | 1.5MM L MAIN DRIVE CHAIN GUARD | 1 |
| 51 | CZB04353 | 1.5MM L GRASS DIVERTOR PLATE | 1 |
| *UP TO SERIAL No 710295* | | | |
| 52 | CZB04367 | 1.5MM L LHS CHAIN GUARD F5 | 1 |
| 53 | CZC04373 | 3MM L BOTTOM STRUT BRACKET | 1 |
| 54 | CZD04321 | 4MM L WASHER 16X55X4 Z/P | 1 |
| 55 | CZD04504 | 4MM L BUFFER MOUNT BRCKT | 2 |
| 56 | CZD04519 | 4MM L F5 PANEL DOOR LOCK BRCKT | 1 |
| 57 | CZD04569 | 4MM PANEL LATCH F550 LHS | 1 |
| 58 | CZD04588 | 4MM L DOOR LOCK SUPPORT BRCKT F5 | 1 |
| 59 | CZD04610 | 4MM OIL PUMP BRACKET F5 SERIES | 1 |
| 60 | CZF00292 | 6MM L CAP LONG FOR 25MM PINS | 1 |
| 61 | CZF02215 | 6MM L WASHER 10.5X50X6 Z/P | 2 |
| 62 | CZF04448 | 6MM L WASHER 35X65X6 Z/P | 2 |
| 63 | CZH04547 | 10MM L CHAMBER NET PLATE RHS | 1 |

## Rear chamber door RHS (745)

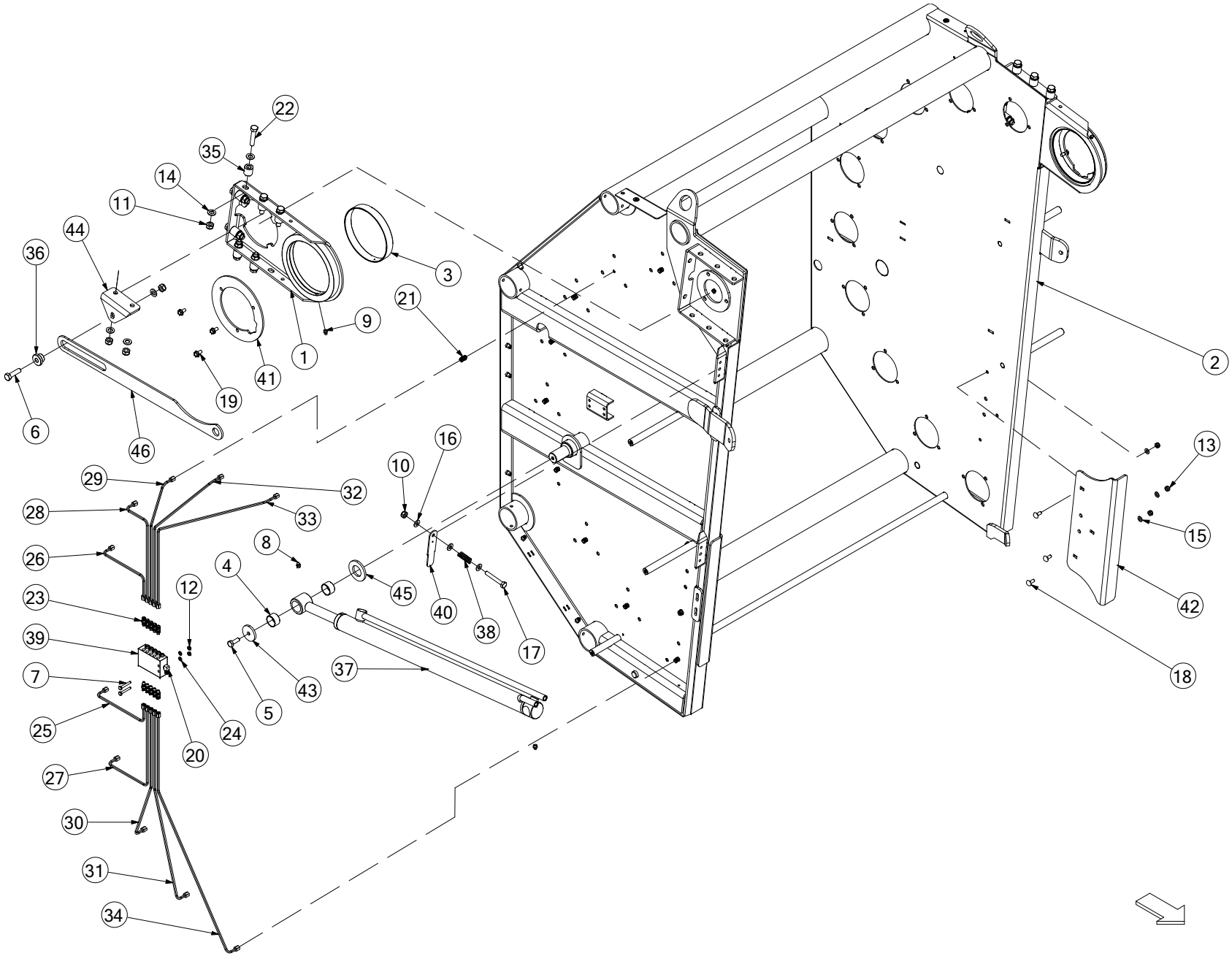

| No. | Part No | Description | Qty |
|---|---|---|---|
| 1 | ACH00170 | HINGE ASSY BALER DOOR | 2 |
| *INCLUDES ITEMS 3 & 9* | | | |
| 2 | ACH01078 | BACK DOOR WELD ASSY F5 SERIES | 1 |
| *USED ON ALL F5 SERIES BALERS (EXCEPT F5600 PLUS)* | | | |
| 2 | ACH01470 | BACK DOOR WELD ASSY F5 NRF | 1 |
| *USED ON F5600 PLUS MACHINES ONLY* | | | |
| 3 | CBR00051 | BEARING GLACIER PM 170 X 25 | 2 |
| 4 | CBR00260 | BEARING GLACIER PM 3220 DX | 2 |
| 5 | CFA00025 | SETSCREW M10X30 | 2 |
| 6 | CFA00065 | SETSCREW M12X45 Z/P | 1 |
| 7 | CFA00099 | SETSCREW M6X40 Z/P | 4 |
| 8 | CFA00111 | GREASE NIPPLE M10X1.5 STRAIGHT | 2 |
| 9 | CFA00118 | GREASE NIPPLE M8X1.25 STRAIGHT | 2 |
| 10 | CFA00123 | NUT M10 NYLOC | 1 |
| 11 | CFA00124 | NUT M12 NYLOC | 15 |
| 12 | CFA00131 | NUT M6 NYLOC | 4 |
| 13 | CFA00132 | NUT M8 NYLOC Z/P | 6 |
| *USED UP TO SERIAL No 714902* | | | |
| 13 | CFA00123 | NUT M10 NYLOC | 6 |
| *USED FROM SERIAL No 714903* | | | |
| 14 | CFA00138 | WASHER FLAT 12MM Z/P | 29 |
| 15 | CFA00147 | WASHER FLAT 8MM Z/P | 6 |
| *USED UP TO SERIAL No 714902* | | | |
| 15 | CFA00201 | WASHER FLAT 10 MM Z/P | 6 |
| *USED FROM SERIAL No 714903* | | | |
| 16 | CFA00201 | WASHER FLAT 10 MM Z/P | 3 |
| 17 | CFA00383 | BOLT M10X70 Z/P | 1 |
| 18 | CFA00506 | SETSCREW M8X20 CUPHEAD SQ Z/P | 6 |
| *USED UP TO SERIAL No 714902* | | | |
| 18 | CFA00442 | SETSCREW M10X25 CUP SQ Z/P | 6 |
| *USED FROM SERIAL No 714903* | | | |
| 19 | CFA00519 | SETSCREW M8X16 FLD Z/P | 6 |
| 20 | CFA00543 | 6MM X 1/8" 90? GREASE FITTING | 1 |
| *F5500 & F5600 MODELS ONLY* | | | |
| 21 | CFA00549 | GREASE FITTING 6MM X 1/8" M/M | 17 |
| 22 | CFA00586 | BOLT M12X60X10.9 FINE THREAD ZP | 14 |
| 23 | CVA00172 | VALVE CHECK 1/8" - M6LL BODY | 10 |
| 24 | CFA00800 | WASHER M6 DIN125 NYLON | 4 |
| 25 | CHY02332 | GREASE PIPE 1 BACK D | 1 |
| 26 | CHY02333 | GREASE PIPE 2 BACK DOOR NDS | 1 |
| 27 | CHY02334 | GREASE PIPE 3 BACK | 1 |
| 28 | CHY02335 | GREASE PIPE 4 BACK DOOR NDS | 1 |
| 29 | CHY02336 | GREASE PIPE 5 BACK DOOR NDS | 1 |
| 30 | CHY02337 | GREASE PIPE 6 BACK DOOR NDS | 1 |
| 31 | CHY02338 | GREASE PIPE 7 BACK | 1 |
| 32 | CHY02339 | GREASE PIPE 8 NDS | 1 |
| 33 | CHY02340 | GREASE PIPE 9 BACK | 1 |
| 34 | CHY02341 | GREASE PIPE 10 BACK DOOR NDS | 1 |
| 35 | CMH00745 | BUSH 12X25X25 | 14 |
| 36 | CMH00771 | BUSH 12X35 STEPPED | 1 |
| 37 | CRA00557 | RAM 40X28X655 DOOR ST BALER | 1 |
| *USED ON ALL F5 SERIES BALERS (EXCEPT F5600 PLUS)* | | | |
| 37 | CRA00797 | RAM 45X32X55 DOOR F5 PLUS BALER | 1 |
| *USED ON F5600 PLUS MACHINES ONLY* | | | |
| 37a | CZC05162 | 3MM L ULTRASONIC READOUT PLATE F5600+ | 1 |
| *USED ON F5600 PLUS MACHINES ONLY* | | | |
| 37b | CFA00943 | U-BOLT M8X1.25X45X55 FOR 33.7 TUBE | 1 |
| *USED ON F5600 PLUS MACHINES ONLY* | | | |
| 37c | CZC02602 | 3MM SENSOR MOUNTING PLATE | 1 |
| *USED ON F5600 PLUS MACHINES ONLY* | | | |
| 37d | CEL00947 | ULTRASONIC SENSOR, SN-300MM | 1 |
| *USED ON F5600 PLUS MACHINES ONLY* | | | |
| 37e | CFA00052 | SETSCREW M8X20 Z/P | 2 |
| *USED ON F5600 PLUS MACHINES ONLY* | | | |
| 38 | CSG00058 | SPRING COMP 2.34WDX15ODX8.5 T/C | 1 |
| 39 | CVA00166 | GREASE BLOCK 10 WAY | 1 |
| *F5500 & F5600 MODELS ONLY* | | | |
| 39 | CVA00567 | GREASE BLOCK 10 WAY (MANUAL) | 1 |
| *F5400 & F5400C MODELS ONLY* | | | |
| 39a | CFA00590 | GREASE NIPPLE 1/8" BSP STR | 10 |
| *F5400 & F5400C MODELS ONLY* | | | |
| 40 | CZC02347 | 3MM L SENSOR ADJUSTER LATCH | 1 |
| *ALSO ORDER RUBBER STRIP CBE00180 (ITEM 40a)* | | | |
| 40a | CBE00180 | RUBBER STRIP PROXIMITY 45X28X2 | 1 |
| 41 | CZE00131 | 5MM L BALER DOOR HINGE PART | 2 |
| 42 | CZE00172 | 5MM L DOOR PLATE ST BALER | 2 |
| *FOR MACHINES PRIOR TO SERIAL No 714903 ALSO ORDER M10 VERSION OF ITEMS 13, 15 & 18* | | | |
| 43 | CZF02215 | 6MM L WASHER 10.5X50X6 Z/P | 2 |
| 44 | CZF03173 | 6MM L CHASSIS PART S | 1 |
| 45 | CZF04448 | 6MM L WASHER 35X65X6 Z/P | 2 |
| 46 | CZF05600 | 6MM L NET RESET ARM F550 | 1 |
| *USED ON ALL F5 SERIES BALERS (EXCEPT F5600 PLUS)* | | | |
| 46 | CZF07284 | 6MM L NET RESET ARM F5600 NRF | 1 |
| *USED ON F5600 PLUS MACHINES ONLY* | | | |

## Rear chamber door LHS (746)

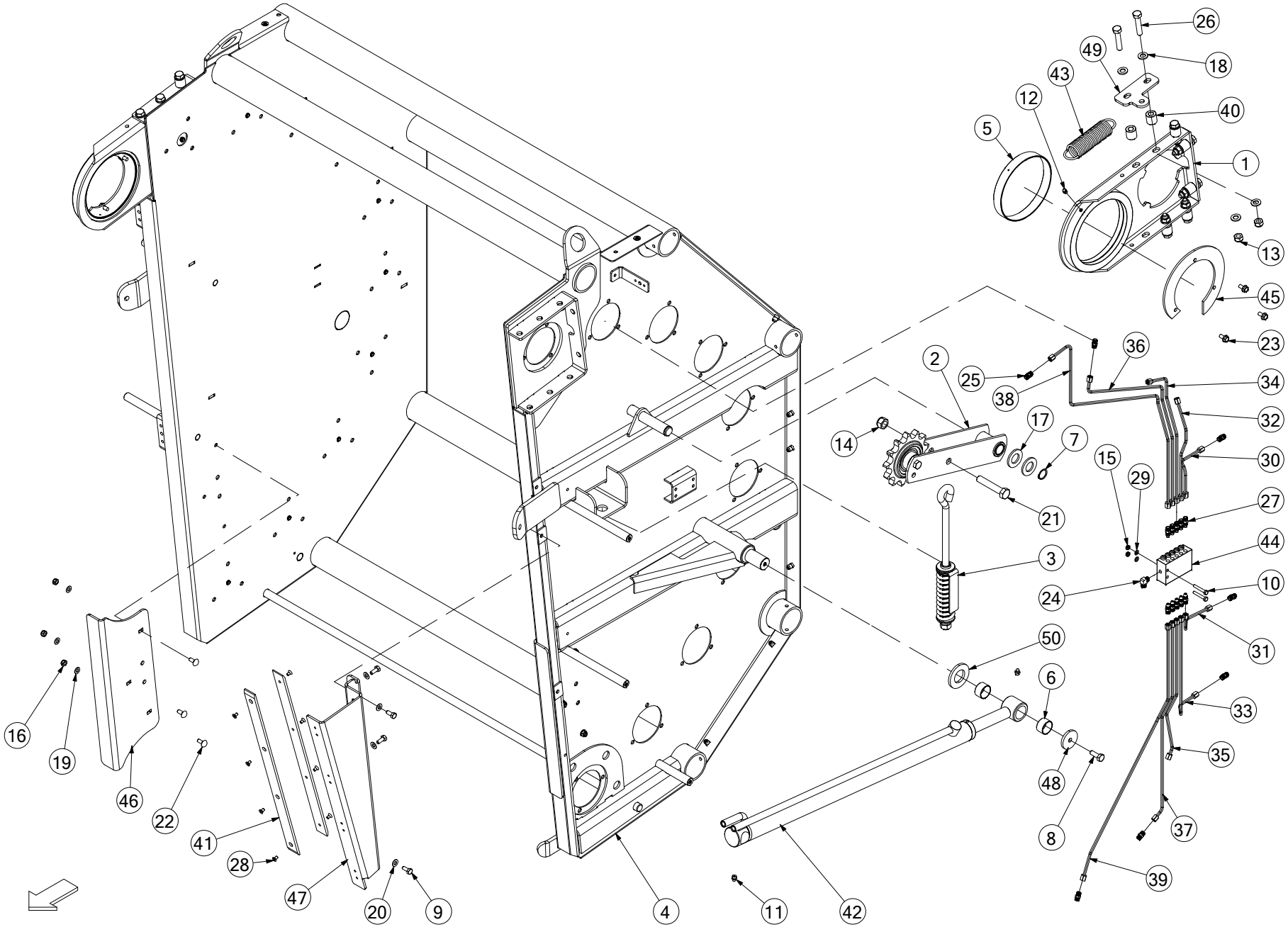

| No. | Part No | Description | Qty |
|---|---|---|---|
| 1 | ACH00170 | HINGE ASSY BALER DOOR | 2 |
| *INCLUDES ITEMS 5 & 12* | | | |
| 2 | ACH00359 | DOOR CHAIN TENSION COMP ASSY | 1 |
| 3 | ACH00437 | FRONT CHAIN ADJ.COMP | 1 |
| 4 | ACH01078 | BACK DOOR WELD ASSY F5 SERIES | 1 |
| *USED ON ALL F5 SERIES BALERS (EXCEPT F5600 PLUS)* | | | |
| 4 | ACH01470 | BACK DOOR WELD ASSY F5 NRF | 1 |
| *USED ON F5600 PLUS MACHINES ONLY* | | | |
| 5 | CBR00051 | BEARING GLACIER PM 170 X 25 | 2 |
| 6 | CBR00260 | BEARING GLACIER PM 3220 DX | 2 |
| 7 | CFA00001 | CIRCLIP 25MM EXTERNAL Z/P | 1 |
| 8 | CFA00025 | SETSCREW M10X30 | 2 |
| 9 | CFA00052 | SETSCREW M8X20 Z/P | 4 |
| 10 | CFA00099 | SETSCREW M6X40 Z/P | 4 |
| 11 | CFA00111 | GREASE NIPPLE M10X1.5 STRAIGHT | 2 |
| 12 | CFA00118 | GREASE NIPPLE M8X1.25 STRAIGHT | 2 |
| 13 | CFA00124 | NUT M12 NYLOC | 14 |
| 14 | CFA00128 | NUT M16 NYLOC | 1 |
| 15 | CFA00131 | NUT M6 NYLOC | 4 |
| 16 | CFA00132 | NUT M8 NYLOC Z/P | 6 |
| *USED UP TO SERIAL No 714902* | | | |
| 16 | CFA00123 | NUT M10 NYLOC Z/P | 6 |
| *USED FROM SERIAL No 714903* | | | |
| 17 | CFA00135 | WASHER FLAT 1" Z/P | 2 |
| 18 | CFA00138 | WASHER FLAT 12MM Z/P | 28 |
| 19 | CFA00147 | WASHER FLAT 8MM Z/P | 6 |
| *USED UP TO SERIAL No 714902* | | | |
| 19 | CFA00201 | WASHER FLAT 10MM Z/P | 6 |
| *USED FROM SERIAL No 714903* | | | |
| 20 | CFA00249 | WASHER SKM8 | 4 |
| 21 | CFA00332 | SETSCREW M16X85 Z/P | 1 |
| 22 | CFA00506 | SETSCREW M8X20 CUPHEAD SQ ZP | 6 |
| *USED UP TO SERIAL No 714902* | | | |
| 22 | CFA00442 | SETSCREW M10X25 CUP SQ Z/P | 6 |
| *USED FROM SERIAL No 714903* | | | |
| 23 | CFA00519 | SETSCREW M8X16 FLD ZP | 6 |
| 24 | CFA00543 | 6MM X 1/8" 90? GREASE FITTING | 1 |
| *F5500 & F5600 MODELS ONLY* | | | |
| 25 | CFA00549 | GREASE FITTING 6MM X 1/8" M/M | 10 |
| 26 | CFA00586 | BOLT M12X60X10.9 FINE THREAD ZP | 14 |
| 27 | CFA00648 | GREASE FITTING TO BLOCK 1/8" | 10 |
| 28 | CFA00760 | SETSCREW M6X10 CSK Z/P DIN 7991 | 8 |
| 29 | CFA00800 | WASHER M6 DIN125 NYLON | 4 |
| 30 | CHY02342 | GREASE PIPE 1 BACK DOOR DS | 1 |
| 31 | CHY02343 | GREASE PIPE 2 BACK DOOR DS | 1 |
| 32 | CHY02344 | GREASE PIPE 3 BACK DOOR DS | 1 |
| 33 | CHY02345 | GREASE PIPE 4 BACK DOOR DS | 1 |
| 34 | CHY02346 | GREASE PIPE 5 BACK | 1 |
| 35 | CHY02347 | GREASE PIPE 6 BACK | 1 |
| 36 | CHY02348 | GREASE PIPE 7 BACK | 1 |
| 37 | CHY02349 | GREASE PIPE 8 BACK | 1 |

| No. | Part No | Description | Qty |
|---|---|---|---|
| 38 | CHY02350 | GREASE PIPE 9 BACK | 1 |
| 39 | CHY02351 | GREASE PIPE 10 BACK | 1 |
| 40 | CMH00745 | BUSH 12X25X25 | 14 |
| 41 | CMH01066 | WEAR STRIP 6X35X575 | 2 |
| 42 | CRA00557 | RAM 40X28X655 DOOR ST BALER | 1 |
| *USED ON ALL F5 SERIES BALERS (EXCEPT F5600 PLUS)* | | | |
| 42 | CRA00797 | RAM 45X32X655 DOOR F5600 PLUS BALER | 1 |
| *USED ON F5600 PLUS MACHINES ONLY* | | | |
| 43 | CSG00226 | SPRING EXT 4.47X37.5X176X26 | 1 |
| *REPLACES CSG00017* | | | |
| 44 | CVA00166 | GREASE BLOCK 10 WAY | 1 |
| *F5500 & F5600 MODELS ONLY* | | | |
| 44 | CVA00567 | GREASE BLOCK 10 WAY (MANUAL) | 1 |
| *F5400 & F5400C MODELS ONLY* | | | |
| 44a | CFA00590 | GREASE NIPPLE 1/8" BSP STR | 10 |
| *F5400 & F5400C MODELS ONLY* | | | |
| 45 | CZE00337 | 5MM L BALER DOOR HINGE PART | 1 |
| *REPLACES CZE00326* | | | |
| 46 | CZE00172 | 5MM L DOOR PLATE ST BALER | 2 |
| *FOR MACHINES PRIOR TO SERIAL No 714903 ALSO ORDER M10 VERSION OF ITEMS 16, 19 & 22* | | | |
| 47 | CZE04224 | 5MM L ST BALER DOOR | 1 |
| 48 | CZF02215 | 6MM L WASHER 10.5X50X6 Z/P | 2 |
| 49 | CZF03176 | 6MM L SPRING BRACKET | 1 |
| 50 | CZF04448 | 6MM L WASHER 35X65X6 Z/P | 2 |

## Chain tensioners (744)

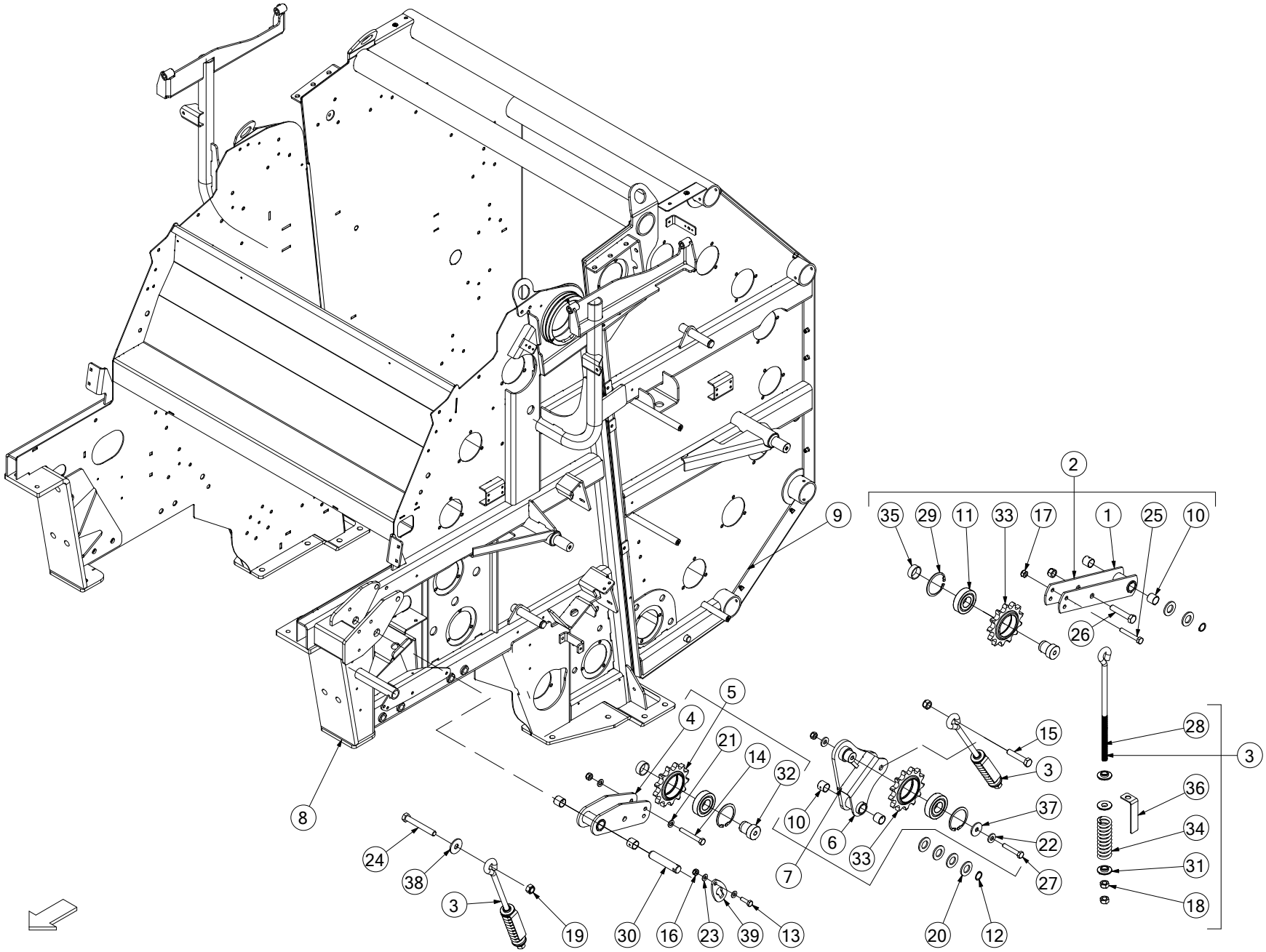

| No. | Part No | Description | Qty |
|---|---|---|---|
| 1 | ACH00188 | DOOR CHAIN TENSION WELD ASSY. | 1 |
| 2 | ACH00359 | DOOR CHAIN TENSION COMP ASSY | 1 |
| 3 | ACH00437 | FRONT CHAIN ADJ.COMP | 3 |
| 4 | ACH00439 | CHAIN TENSIONER WELD ASSY M.D. | 1 |
| 5 | ACH00440 | CHAIN TENSIONER COMP ASSY M.D. | 1 |
| 6 | ACH00550 | CHAIN TENSIONER WELD ASSY | 1 |
| 7 | ACH00551 | CHAIN TENSIONER COMP ASSY | 1 |
| 8 | ACH01055 | FRONT DOOR WELD ASSY F5 SERIES | 1 |
| *USED ON ALL F5 SERIES BALERS (EXCEPT F5600 PLUS)* | | | |
| 8 | ACH01469 | FRONT DOOR WELD ASSY F5 NRF | 1 |
| *USED ON F5600 PLUS MACHINES ONLY* | | | |
| 9 | ACH01078 | BACK DOOR WELD ASSY F5 SERIES | 1 |
| *USED ON ALL F5 SERIES BALERS (EXCEPT F5600 PLUS)* | | | |
| 9 | ACH01470 | BACK DOOR WELD ASSY F5 NRF | 1 |
| *USED ON F5600 PLUS MACHINES ONLY* | | | |
| 10 | CBR00039 | BEARING GLACIER PM 2525 DX | 6 |
| 11 | CBR00294 | BEARING 6307 2RS | 3 |
| 12 | CFA00001 | CIRCLIP 25MM EXTERNAL Z/P | 2 |
| 13 | CFA00016 | BOLT M10X35 | 1 |
| 14 | CFA00034 | BOLT M12X90 Z/P | 1 |
| 15 | CFA00043 | BOLT M16X80 | 1 |
| 16 | CFA00123 | NUT M10 NYLOC | 1 |
| 17 | CFA00124 | NUT M12 NYLOC | 3 |
| 18 | CFA00127 | NUT M16 | 6 |
| 19 | CFA00128 | NUT M16 NYLOC | 3 |
| 20 | CFA00135 | WASHER FLAT 1" Z/P | 6 |
| 21 | CFA00138 | WASHER FLAT 12MM Z/P | 2 |
| 22 | CFA00139 | WASHER FLAT 12MM H/D Z/P | 2 |
| 23 | CFA00201 | WASHER FLAT 10 MM Z/P | 2 |
| 24 | CFA00209 | BOLT M16X120 Z/P | 1 |
| 25 | CFA00330 | BOLT M12X80 Z/P | 1 |
| 26 | CFA00332 | SETSCREW M16X85 Z/P | 1 |
| 27 | CFA00592 | BOLT M12X70 ZP | 1 |
| 28 | CFA00672 | EYE BOLT 16MM SPRING TENSIONER | 3 |
| 29 | CFA00882 | CIRCLIP INTERNAL 25X1.2 DIN 472 | 3 |
| 30 | CMH00387 | PIN 25 X 120 MILLED FOR CAP | 1 |
| 31 | CMH00464 | BUSH 45X17X10 STEPPED 25 | 9 |
| 32 | CMH00467 | BUSH 45X12.5X52 STEPPED 35 | 2 |
| 33 | CMH01252 | SPROCKET 1 1/4" 13 TOOTH | 3 |
| 34 | CSG00025 | SPRING COMPX8.5X44.8 | 3 |
| 35 | CXT00185 | TUBE 42.4X3X16 | 2 |
| 36 | CZC02057 | 3MM L CHAIN TENSIONE | 3 |
| 37 | CZD02186 | 4MM L WASHER 50X13X4 | 1 |
| 38 | CZD04321 | 4MM L WASHER 16X40X4 Z/P | 1 |
| 39 | CZF00292 | 6MM L CAP LONG FOR 25MM PINS | 1 |

| No. | Part No | Description | Qty |
|---|---|---|---|

## Slatted Roller No.1A (731)

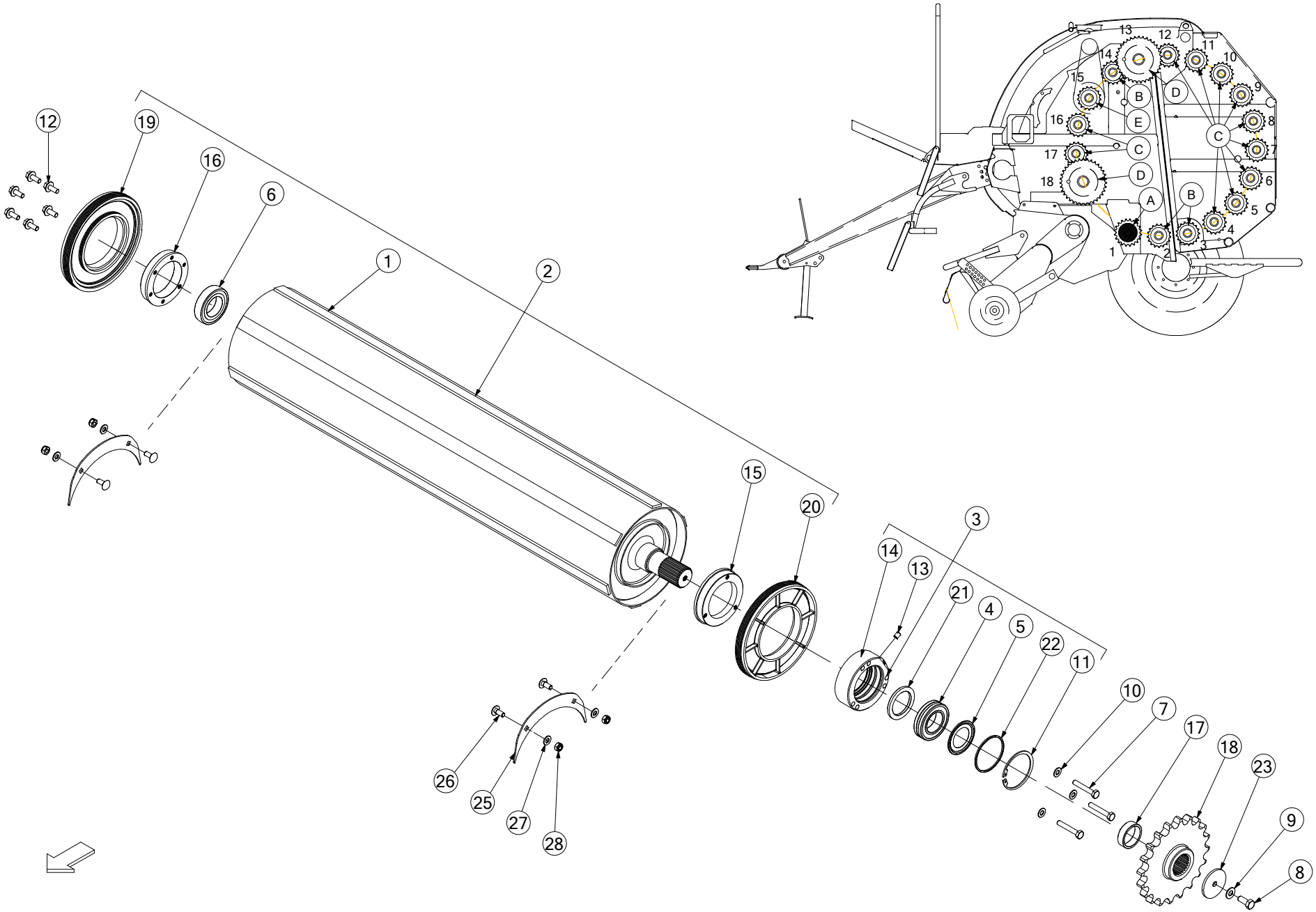

| No. | Part No | Description | Qty |
|---|---|---|---|
| 1 | ARC00183 | CHAMBER ROLLER NUMBER 1 WELD ASSY | 1 |
| 2 | ARC00243 | NO 1 ROLLER SPARE PARTS REPLACEMENT<br>*(ALSO INCLUDES ITEM 18 SPROCKET CMH01324) REPLACES ARC00238* | 1 |
| 3 | ART00051 | BEARING ROLLER COMP ASSY | 1 |
| 4 | CBR00060 | BEARING SPHERICAL SKF 2210CC | 1 |
| 5 | CBR00061 | NILOS-RING 6210AV | 1 |
| 6 | CBR00083 | BEARING 1726210-2RS RADIAL | 1 |
| 7 | CFA00028 | BOLT M10X65 Z/P | 3 |
| 8 | CFA00032 | SETSCREW M12X30 Z/P | 1 |
| 9 | CFA00250 | WASHER SKM12 | 1 |
| 10 | CFA00251 | WASHER SKM10 | 3 |
| 11 | CFA00452 | CIRCLIP 95MM INTERNAL | 1 |
| 12 | CFA00520 | SETSCREW M10X25 FLD ZP | 6 |
| 13 | CFA00559 | GRUBSCREW M10X12 | 1 |
| 14 | CMH00511 | BUSH 90X135X46 BEARING HOUSING | 1 |
| 15 | CMH00696 | FLANGE 90X140X25 MACHINED | 1 |
| 16 | CMH00697 | FLANGE 90X145X25 6 HOLE | 1 |
| 17 | CMH00812 | BUSH 50X60X17 | 1 |
| 18 | CMH01324 | SPROCKET 1 1/4" PITCH 20T (50MM SPLINE) | 1 |
| 19 | CPL00107 | SEAL ROLLER NO.1 NDS (LARGE)<br>*CPL00107 & CPL00108 SHOULD BE REPLACED AS A PAIR* | 1 |
| 20 | CPL00108 | SEAL ROLLER NO.1 DS (LARGE)<br>*CPL00107 & CPL00108 SHOULD BE REPLACED AS A PAIR* | 1 |
| 21 | CSE00099 | SEAL OIL 58X80X8 | 1 |
| 22 | CZC02063 | 3MM L BEARING RETAINER RING | 1 |
| 23 | CZE00115 | BALE SPLITTER WASHER | 1 |
| 25 | CZC04607 | 3MM L ROLLER SEAL COVER<br>*USED ON SLATTED STARTER ROLLER No 1A ONLY UP TO SERIAL No 714937* | 2 |
| 25 | CTP00517 | NO1 ROLLER SEAL PROTECTOR<br>*USED ON SLATTED STARTER ROLLER No 1A ONLY FROM SERIAL No 714938* | 2 |
| 26 | CFA00442 | SETSCREW M10X25 CUP SQ ZP<br>*USED WITH CZC04607 UP TO SERIAL No 714937* | 4 |
| 27 | CFA00201 | WASHER FLAT 10MM Z/P<br>*USED WITH CZC04607 UP TO SERIAL No 714937* | 4 |
| 27 | CFA00251 | WASHER SKM10<br>*USED WITH CTP00517 FROM SERIAL No 714938* | 4 |
| 28 | CFA00123 | NUT M10 NYLOC ZP<br>*USED WITH CZC04607 UP TO SERIAL No 714937* | 4 |
| 28 | CFA00022 | SETSCREW M10X16 Z/P<br>*USED WITH CTP00517 FROM SERIAL No 714938* | 4 |

| No. | Part No | Description | Qty |
|---|---|---|---|

# Std Ribbed Roller Type-B (732)

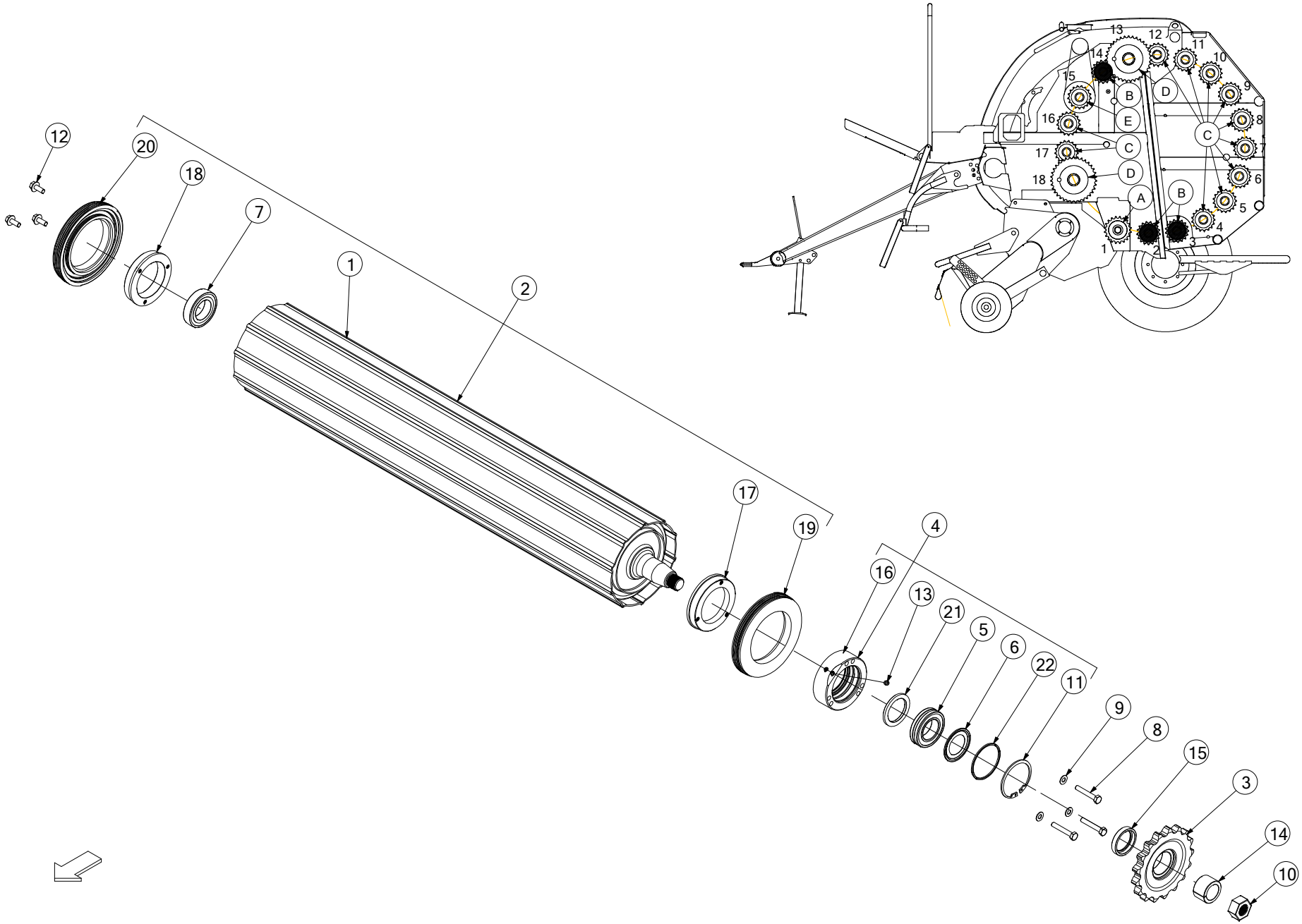

| No. | Part No | Description | Qty |
|---|---|---|---|
| 1 | ARC00029 | STD ROLLER SHORT SHAFT | 1 |
| *USED ON ALL F5 SERIES BALERS (EXCEPT AT LOCATION '3' ON F5600 PLUS MACHINES - BOTTOM TAILGATE ROLLER)* | | | |
| 1 | ARC00427 | F5600+ BACK DOOR ROLLER WELD ASSEM | 1 |
| *SMOOTH (NON-RIBBED) ROLLER USED AT LOCATION '3' ON F5600 PLUS MACHINES ONLY - BOTTOM TAILGATE ROLLER* | | | |
| 2 | ARC00030 | BALER ROLLER STD COMP. ASSY. | 1 |
| *USED ON ALL F5 SERIES BALERS (EXCEPT AT LOCATION '3' ON F5600 PLUS MACHINES - BOTTOM TAILGATE ROLLER)* | | | |
| 2 | ARC00430 | SMOOTH CHAMBER ROLLER COMPLETE ASM | 1 |
| *SMOOTH (NON-RIBBED) ROLLER USED AT LOCATION '3' ON F5600 PLUS MACHINES ONLY - BOTTOM TAILGATE ROLLER* | | | |
| 3 | ART00081 | 1 1/4" PITCH 17 T SPROCKET ASY | 1 |
| 4 | ART00051 | BEARING ROLLER COMP ASSY | 1 |
| 5 | CBR00060 | BEARING SPHERICAL SKF 2210CC | 1 |
| 6 | CBR00061 | NILOS-RING 6210AV | 1 |
| 7 | CBR00083 | BEARING 1726210-2RS RADIAL | 1 |
| 8 | CFA00028 | BOLT M10X65 Z/P | 3 |
| 9 | CFA00251 | WASHER SKM10 | 3 |
| 10 | CFA00401 | NUT M30X2 FINE THREAD | 1 |
| 11 | CFA00452 | CIRCLIP 95MM INTERNAL | 1 |
| 12 | CFA00520 | SETSCREW M10X25 FLD ZP | 3 |
| 13 | CFA00559 | GRUBSCREW M10X12 | 1 |
| 14 | CMH00507 | BUSH 39X56X33 TAPER | 1 |
| 15 | CMH00510 | BUSH 50X68X12.5 STEP | 1 |
| 16 | CMH00511 | BUSH 90X135X46 BEARING HOUSING | 1 |
| 17 | CMH00696 | FLANGE 90X140X25 MACHINED | 1 |
| 18 | CMH01187 | FLANGE 90X145X25 3 HOLE | 1 |
| 19 | CPL00052 | NYLON SEAL ROLLER DRIVE SIDE | 1 |
| 20 | CPL00053 | NYLON SEAL ROLLER NON DRIVE SIDE | 1 |
| 21 | CSE00099 | SEAL OIL 58X80X8 | 1 |
| 22 | CZC02063 | 3MM L BEARING RETAINER RING | 1 |

| No. | Part No | Description | Qty |
|---|---|---|---|

## Std Ribbed Roller Type-C (733)

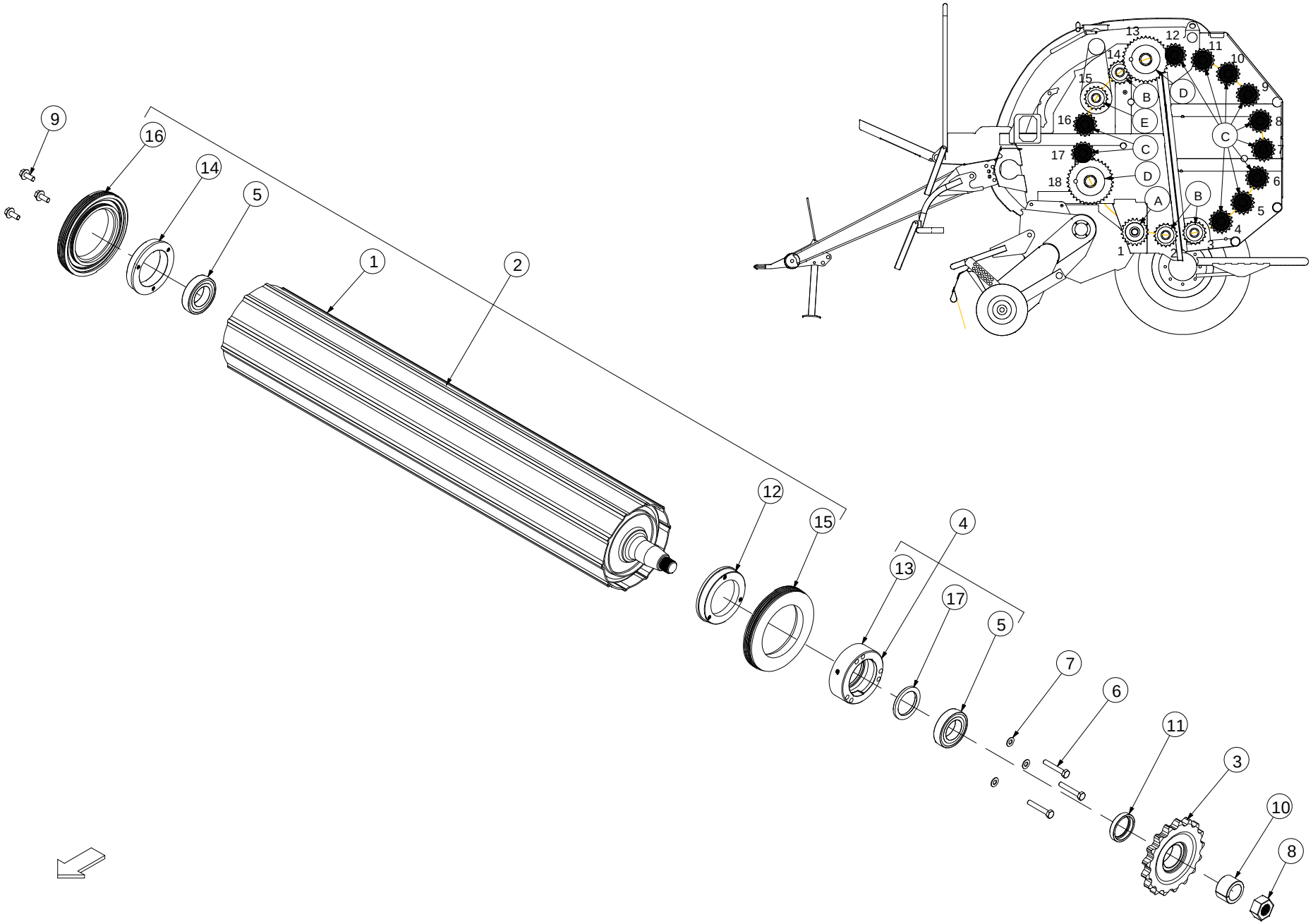

| No. | Part No | Description | Qty |
|---|---|---|---|
| 1 | ARC00029 | BALER ROLLER SHORT SHAFT | 1 |
| 2 | ARC00030 | BALER ROLLER STD COMP. ASSY. | 1 |
| 3 | ART00081 | 1 1/4" PITCH 17 T SPROCKET ASY | 1 |
| 4 | ART00293 | BEARING HOUSING 76210 ASSY | 1 |
| 5 | CBR00083 | BEARING 1726210-2RS RADIAL | 2 |
| 6 | CFA00028 | BOLT M10X65 Z/P | 3 |
| 7 | CFA00251 | WASHER SKM10 | 3 |
| 8 | CFA00401 | NUT M30X2 FINE THREAD | 1 |
| 9 | CFA00520 | SETSCREW M10X25 FLD ZP | 3 |
| 10 | CMH00507 | BUSH 39X56X33 TAPPER | 1 |
| 11 | CMH00510 | BUSH 50X68X12.5 STEP | 1 |
| 12 | CMH00696 | FLANGE 90X140X25 MACHINED | 1 |
| 13 | CMH00905 | BUSH 90X135X46 BEARING HOUSING | 1 |
| 14 | CMH01187 | FLANGE 90X145X25 3 HOLE | 1 |
| 15 | CPL00052 | NYLON SEAL ROLLER DRIVE SIDE | 1 |
| 16 | CPL00053 | NYLON SEAL ROLLER NON DRIVE SIDE | 1 |
| 17 | CSE00099 | SEAL OIL 58X80X8 | 1 |

| No. | Part No | Description | Qty |
|---|---|---|---|

## *Ribbed roller Type-D (734)*

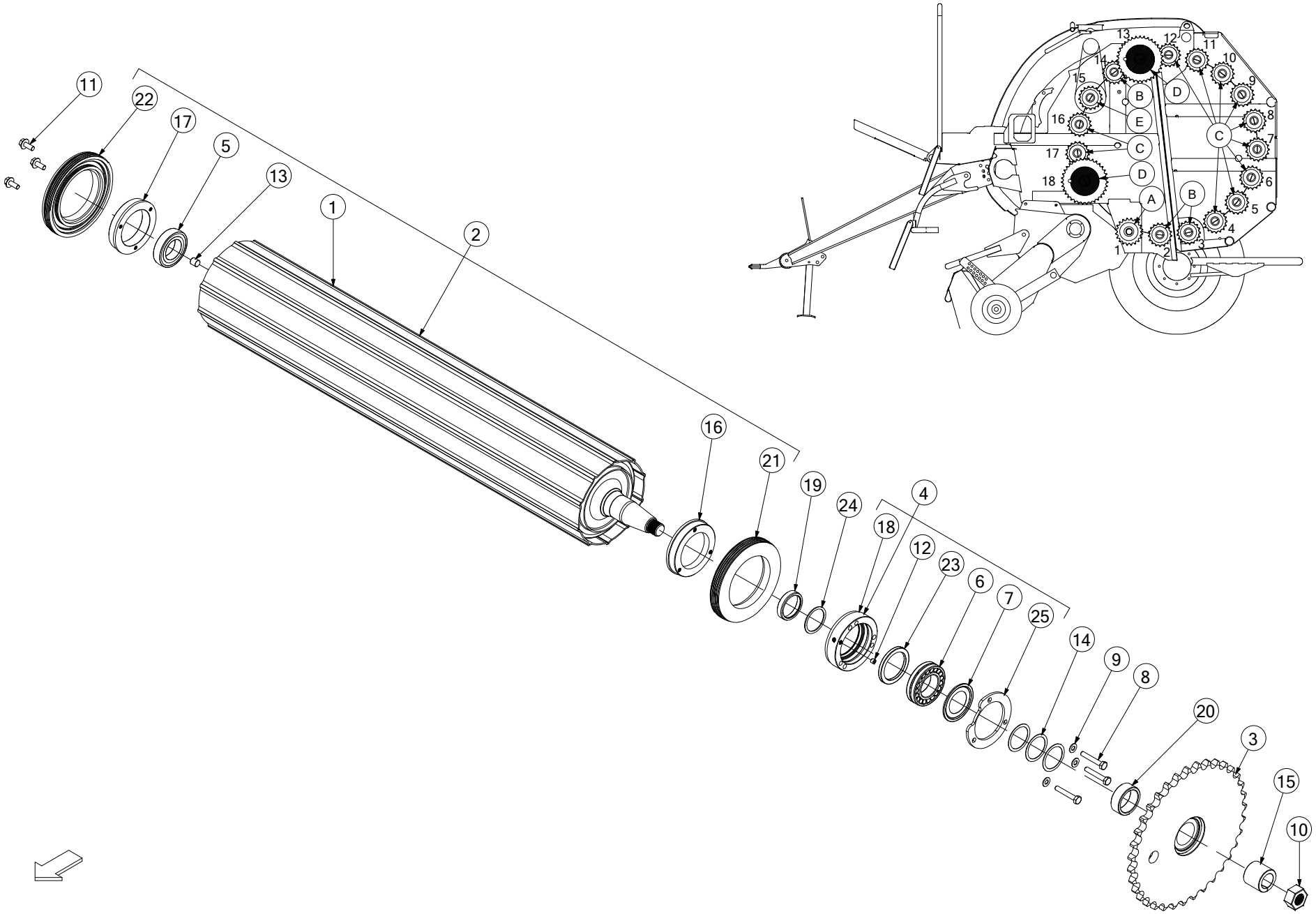

| No. | Part No | Description | Qty |
|---|---|---|---|
| 1 | ARC00457 | ROLLER WELD LONG SHAFT 55MM DIA<br>*USED FROM SERIAL No 714355 (FOR BALERS UP TO SERIAL No 714354 ALSO ORDER ADAPTOR KIT KST00091)* | 1 |
| 2 | ARC00459 | ROLLER LONG SHAFT 55MM DIA COMP ASY<br>*USED FROM SERIAL No 714355 (FOR BALERS UP TO SERIAL No 714354 ALSO ORDER ADAPTOR KIT KST00091)* | 1 |
| 3 | ART00087 | SPROCKET ASSY BOTTOM DOOR DRIVE | 1 |
| 4 | ART00051 | BEARING ROLLER COMP ASSY<br>*USED UP TO SERIAL No 714354* | 1 |
| 4 | ART00387 | BEARING HOUSING 22211 COMP<br>*USED FROM SERIAL No 714355* | 1 |
| 5 | CBR00083 | BEARING 1726210-2RS RADIAL | 1 |
| 6 | CBR00060 | BEARING SPHERICAL SKF 2210CC<br>*USED UP TO SERIAL No 714354* | 1 |
| 6 | CBR00355 | BEARING 22211 SPHERICAL ROLLER<br>*USED FROM SERIAL No 714355* | 1 |
| 7 | CBR00061 | NILOS-RING 6210AV<br>*USED UP TO SERIAL No 714354* | 1 |
| 7 | CBR00356 | NILOS-RING 2211AV<br>*USED FROM SERIAL No 714355* | 1 |
| 8 | CFA00028 | BOLT M10X65 Z/P | 3 |
| 9 | CFA00251 | WASHER SKM10 | 3 |
| 10 | CFA00401 | NUT M30X2 FINE THREAD | 1 |
| 11 | CFA00520 | SETSCREW M10X25 FLD ZP | 3 |
| 12 | CFA00559 | GRUBSCREW M10X8 | 1 |
| 13 | CFA00906 | GRUB SCREW M16X16 DIN913 | 1 |
| 14 | CFA00048 | SHIM 50X62X1.0<br>*USED UP TO SERIAL No 714354* | 3 |
| 14 | CFA01143 | SHIM 55X67X1.0<br>*USED FROM SERIAL No 714355* | 3 |
| 15 | CMH00508 | BUSH 36X58X47 TAPERED COLLET | 1 |
| 16 | CMH00696 | FLANGE 90X140X25 MACHINED | 1 |
| 17 | CMH01187 | FLANGE 90X130X24 3 HOLE | 1 |
| 18 | CMH00511 | BUSH 90X135X46 BEARING HOUSING<br>*USED UP TO SERIAL No 714354* | 1 |
| 18 | CMH01853 | BUSH 100X135X38 BEARING HOUSING<br>*USED FROM SERIAL No 714355* | 1 |
| 19 | CMH00445 | BEARING ROLLER SLEEVE 50 IDX14<br>*USED UP TO SERIAL No 714354* | 1 |
| 19 | CMH01857 | BEARING ROLLER SLEEVE 55 IDX14<br>*USED FROM SERIAL No 714355* | 1 |
| 20 | CMH00736 | BUSH 50X68X25 STEPPED 58<br>*USED UP TO SERIAL No 714354* | 1 |
| 20 | CMH01858 | BUSH 55X70X25<br>*USED FROM SERIAL No 714355* | 1 |
| 21 | CPL00052 | NYLON SEAL ROLLER DRIVE SIDE | 1 |
| 22 | CPL00053 | NYLON SEAL ROLLER NON DRIVE SIDE | 1 |
| 23 | CSE00657 | SEAL 68X90X8 | 1 |
| 24 | CZB00428 | 2MM SPACER RING PART 55MM ROLLER<br>*USED FROM SERIAL No 714355* | 1 |
| 25 | CZC02063 | 3MM L BEARING RETAINER RING<br>*USED UP TO SERIAL No 714354* | 1 |
| 25 | CFA00452 | CIRCLIP 95MM INTERNAL<br>*USED UP TO SERIAL No 714354* | 1 |
| 25 | CZF00334 | 6MM L BEARING RETAINER RING | 1 |

| No. | Part No | Description | Qty |
|---|---|---|---|
| *USED FROM SERIAL No 714355* | | | |

# Ribbed Roller Type-E (735)

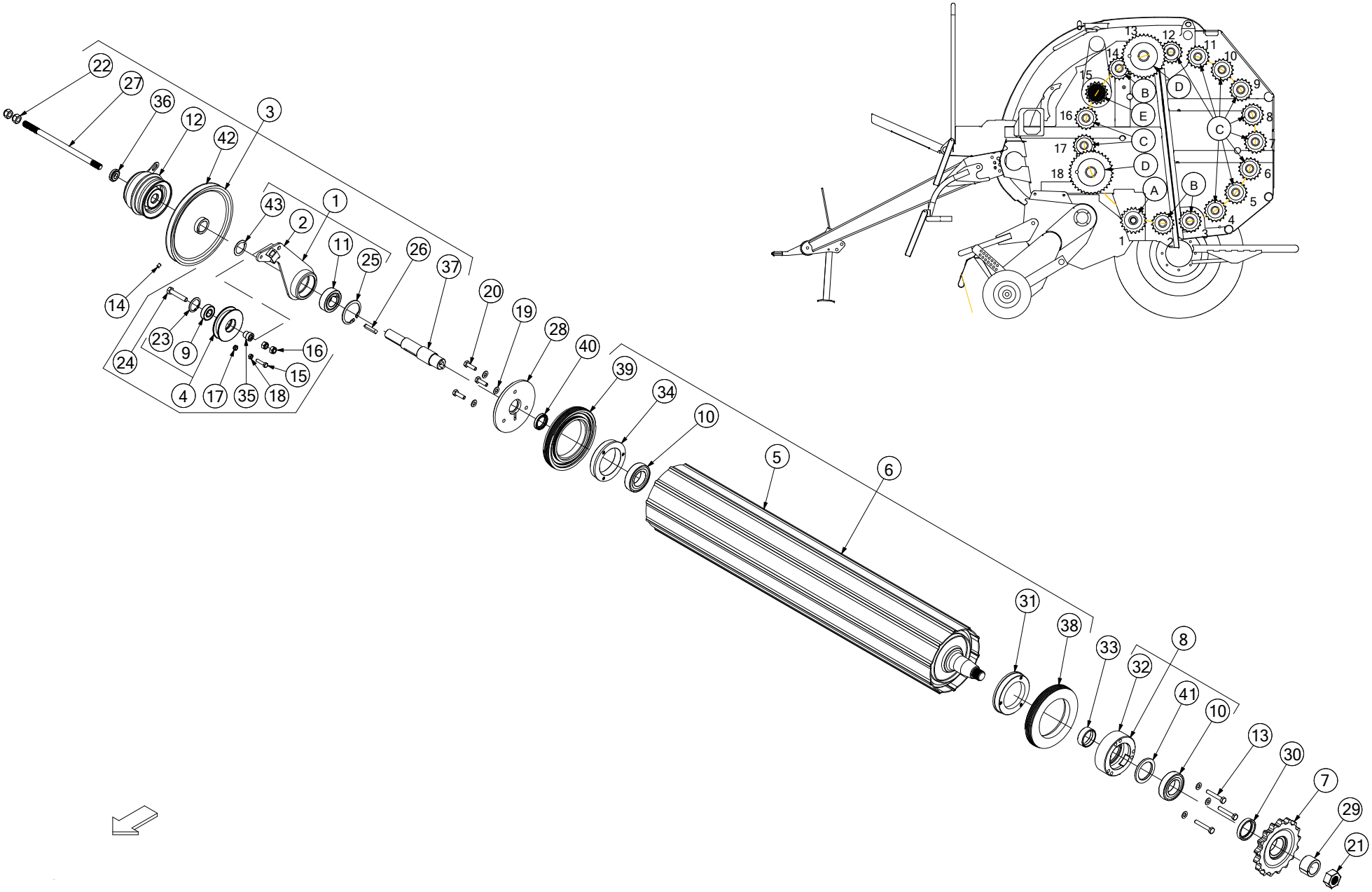

| No. | Part No | Description | Qty |
|---|---|---|---|
| 1 | ACN00116 | BELT TENSIONER F5 SERIES NETTER | 1 |
| *FROM SERIAL No 707900 (INCLUDES PULLEY, BEARINGS & FASTENERS)* | | | |
| 2 | ACN00117 | BELT TENSIONER F5 SERIES NETTER | 1 |
| 3 | ALA00510 | NETTER CLUTCH SHAFT ASSY F5 | 1 |
| *INCLUDES ITEMS 1, 12, 22, 26, 27, 36, 37 & 42* | | | |
| 4 | ANT00004 | PULLEY WHEEL BELT TENSIONER ASSY | 1 |
| 5 | ARC00292 | BALER ROLLER F5 CLUTCH ASSY | 1 |
| 6 | ARC00293 | BALER ROLLER F5 CLUTCH ASSY | 1 |
| *INCLUDES ITEMS 5, 10, 31, 34, 38 & 39* | | | |
| 7 | ART00081 | 1 1/4" PITCH 17 T SPROCKET ASY | 1 |
| 8 | ART00293 | BEARING HOUSING 76210 ASSY | 1 |
| 9 | CBR00020 | BEARING 6204 2RS | 1 |
| 10 | CBR00083 | BEARING 1726210-2RS RADIAL | 2 |
| 11 | CBR00122 | BEARING CSK35-PP-2RS CLUTCH | 1 |
| 12 | CEL00259 | SHAFT MOUNTED | 1 |
| 13 | CFA00028 | BOLT M10X65 Z/P | 4 |
| 14 | CFA00051 | GRUBSCREW M8X10 | 1 |
| 15 | CFA00055 | BOLT M8X35 Z/P | 1 |
| 16 | CFA00124 | NUT M12 NYLOC | 2 |
| 17 | CFA00132 | NUT M8 NYLOC Z/P | 1 |
| 18 | CFA00133 | NUT M8 Z/P | 1 |
| 19 | CFA00251 | WASHER SKM10 | 6 |
| 20 | CFA00311 | SETSCREW M10X35 Z/P | 3 |
| 21 | CFA00401 | NUT M30X2 FINE THREAD | 1 |
| 22 | CFA00414 | NUT M16X1.5 NYLOC FINE THREAD | 2 |
| 23 | CFA00458 | CIRCLIP 75MM INTERNAL | 1 |
| 24 | CFA00579 | BOLT M12X65 ZP | 1 |
| 25 | CFA00866 | CIRCLIP 75MM INTERNAL | 1 |
| 26 | CFA00904 | KEY 10X8X50 | 1 |
| 27 | CFA00905 | M16X325 STUD SPECIAL NET CLUTCH | 1 |
| 28 | CMH00493 | FLANGE 40 X 170 X 10 | 1 |
| *UP TO SERIAL No 712035* | | | |
| 28 | ARC00150 | SEAL PLATE ASSY NET CLUTCH | 1 |
| *FROM SERIAL No 712036 (INCLUDES SHAFT SEAL ITEM 40)* | | | |
| 29 | CMH00507 | BUSH 39X56X33 TAPERED COLLET | 1 |
| 30 | CMH00510 | BUSH 50X68X12.5 STEP | 1 |
| 31 | CMH00696 | FLANGE 90X140X25 MACHINED | 1 |
| 32 | CMH00905 | BUSH 90X135X46 BEARING HOUSING | 1 |
| 33 | CMH00906 | BEARING ROLLER SLEEVE 50 ID | 1 |
| 34 | CMH01187 | FLANGE 90X145X25 3 HOLE | 1 |
| 35 | CMH01362 | BUSH 10X25 STEPPED 20 | 1 |
| 36 | CMH02206 | WASHER 16X38X10 STEPPED Z/P | 1 |
| 36a | CFA00783 | WASHER NL16 NORD-LOCK | 1 |
| 37 | CMH02451 | CLUTCH SHAFT V660 | 1 |
| 38 | CPL00052 | NYLON SEAL ROLLER DRIVE SIDE | 1 |
| 39 | CPL00053 | NYLON SEAL ROLLER NON DRIVE SIDE | 1 |
| 40 | CSE00098 | SEAL RADIAL SHAFT SEAL 35 X 50 X 8 | 1 |
| 41 | CSE00099 | SEAL OIL 58X80X8 | 1 |
| 42 | CTP00387 | SPB BELT PULLEY PRESSED STEEL 250MM | 1 |
| *FROM SERIAL No 707900* | | | |

| No. | Part No | Description | Qty |
|---|---|---|---|
| 42 | CMH02452 | 224MM B-SECTION PULLEY WHEEL | 1 |
| *UP TO SERIAL No 707899* | | | |
| 42a | CMH00974 | TAPER BUSH 2012 35MM BORE | 1 |
| *UP TO SERIAL No 707899* | | | |
| 42b | CFA00692 | GRUBSCREW 7/16 X 7/8 BSW | 2 |
| *UP TO SERIAL No 707899* | | | |
| 43 | CZB02472 | 1.5MM L BELT TENSIONER SHIM F5 SERIES | 1 |

## Netter 1 (737)

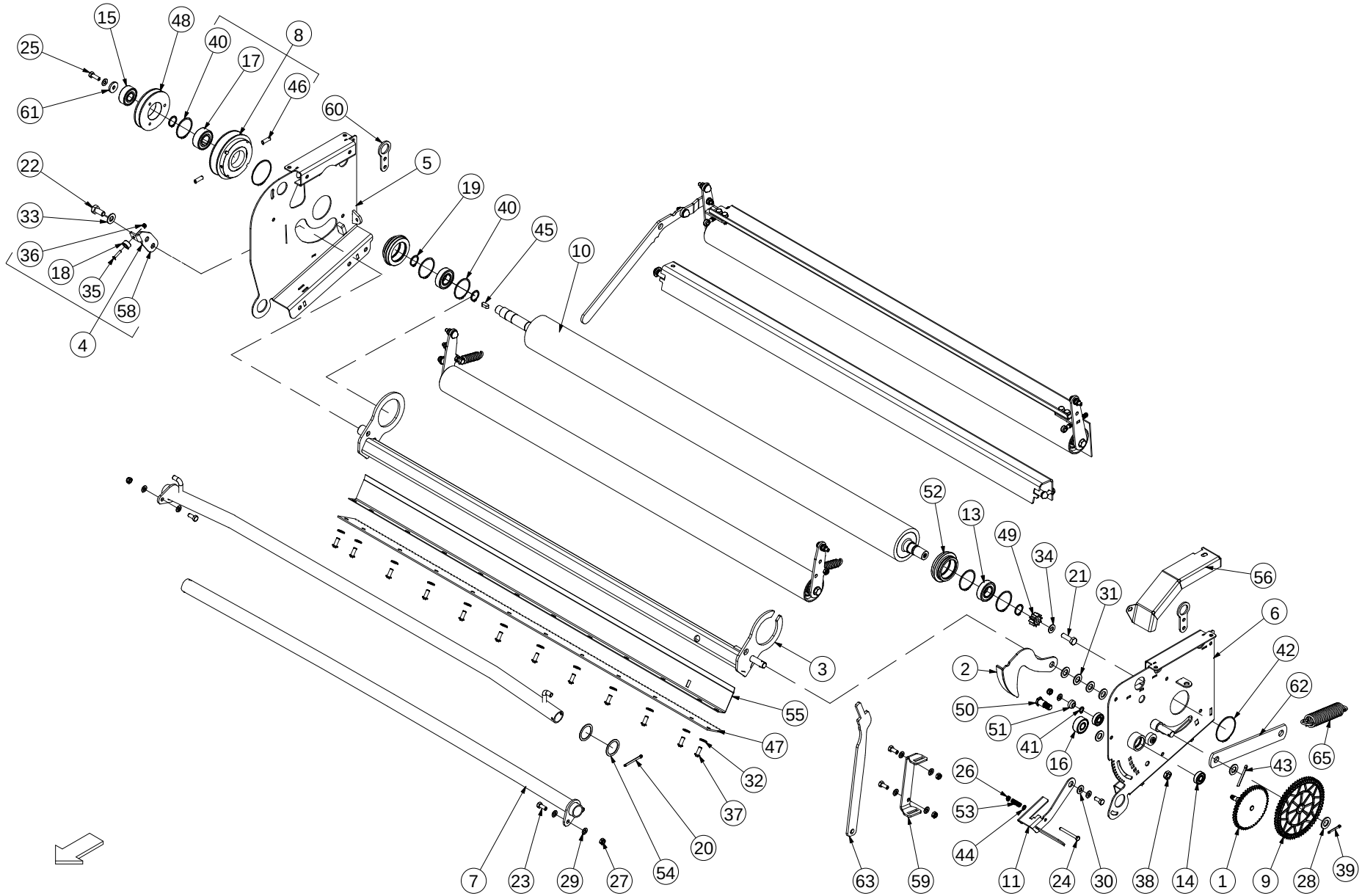

15
48
40
8
25
17
46
61
60
22
5
19
40
33
45
36
10
18
35
58
4
52
13
49
34
21
31
56
6
3
2
42
62
50
55
51
41
47
16
65
43
32
26
37
53
20
44
7
23
29
27
54
63
59
11
24
30
38
14
1
9
28
39

| No. | Part No | Description | Qty |
|---|---|---|---|
| 1 | ACH00279 | PLATEWHEEL ASSY. NET UNIT | 1 |
| 2 | ACH00369 | NET RELEASE UNIT ASSY. | 1 |
| 3 | ACH01155 | NET KNIFE WELD ASSY | 1 |
| 4 | ADP00253 | NET KNIFE MAGNET BRACKET | 1 |
| 5 | ADP00259 | NET STRETCH UNIT WELD RIGHT | 1 |
| 6 | ADP00260 | NET STRETCH UNIT WELD LEFT | 1 |
| 7 | ADP00261 | SPREADER BAR ASSY NET UNIT | 2 |
| 8 | ANT00002 | PULLEY VARIABLE ASSEMBLY | 1 |
| 9 | ARC00050 | SPROCKET 64/12 TOOTH ASSY | 1 |
| 10 | ARC00267 | 1300MM DRIVE ROLLER NET UNIT | 1 |
| 11 | ATR00023 | NET LENGTH HANDLE ASSY | 1 |
| 13 | CBR00009 | BEARING 6205 2RS | 2 |
| 14 | CBR00067 | BEARING 6201 | 2 |
| 15 | CBR00084 | BEARING SEALED SPRAG CLUTCH | 1 |
| 16 | CBR00081 | BEARING CAM INA LR 5202 NPPU | 1 |
| *REPLACES CBR00273* | | | |
| 17 | CBR00297 | 25MM SPRAG TYPE OVERRUNNING CLUTCH | 1 |
| 18 | CEL00059 | MAGNET 20 X 10 260369 | 1 |
| 19 | CFA00001 | CIRCLIP 25MM EXTERNAL Z/P | 4 |
| 20 | CFA00013 | SPLIT PIN 5X50 Z/P | 1 |
| 21 | CFA00016 | BOLT M10X35 | 1 |
| 22 | CFA00031 | SETSCREW M12X25 Z/P | 1 |
| 23 | CFA00052 | SETSCREW M8X20 Z/P | 7 |
| 24 | CFA00054 | SETSCREW M6X60 Z/P | 1 |
| 25 | CFA00102 | SETSCREW M8X25 Z/P | 3 |
| 26 | CFA00131 | NUT M6 NYLOC | 1 |
| 27 | CFA00132 | NUT M8 NYLOC Z/P | 13 |
| 28 | CFA00140 | WASHER FLAT 16MM Z/P | 1 |
| 29 | CFA00147 | WASHER FLAT 8MM Z/P | 18 |
| 30 | CFA00201 | WASHER FLAT 10 MM Z/P | 1 |
| 31 | CFA00222 | WASHER FLAT 14MM Z/P | 6 |
| 32 | CFA00249 | WASHER SKM8 | 18 |
| 33 | CFA00250 | WASHER SKM12 | 1 |
| 34 | CFA00251 | WASHER SKM10 | 1 |
| 35 | CFA00261 | SETSCREW M5X25 CSK HEX SS | 1 |
| 36 | CFA00348 | NUT M5 NYLOC SS | 1 |
| 37 | CFA00429 | SETSCREW M8X20 BUTTON HEAD Z/P | 12 |
| 38 | CFA00446 | NUT M12 HEXAGON LOCK/HALF NUT | 1 |
| 39 | CFA00450 | SPLIT PIN 4 X36 Z/P | 1 |
| 40 | CFA00461 | CIRCLIP 52MM INTERNAL | 5 |
| 41 | CFA00499 | CIRCLIP 10MM EXTERNAL | 1 |
| 42 | CFA00501 | CIRCLIP 65MM EXTERNAL | 2 |
| 43 | CFA00556 | SPLIT PIN 6X50 Z/P | 1 |
| 44 | CFA00641 | WASHER FLAT 6MM NYLON | 1 |
| 45 | CFA00883 | KEY 8X7X20 | 1 |
| 46 | CFA00918 | GRUBSCREW M8X25 Z/P | 2 |
| 47 | CKN00024 | NET KNIFE 1300mm (NEW TYPE) | 1 |
| 48 | ANT00145 | NET PULLEY WHEEL PITCH DIA 100 ASSEM | 1 |
| *COMPLETE WITH SPRAG BEARING ITEM 15 (REPLACES CMH00596 PULLEY ONLY)* | | | |

| No. | Part No | Description | Qty |
|---|---|---|---|
| 49 | CMH00603 | GEAR SPUR MOD 2.5 10 TOOTH | 1 |
| 50 | CMH00672 | BOLT SHOULDER 3/4" H | 1 |
| 51 | CMH00705 | BUSH 10X25X10 NYLON | 1 |
| 52 | CMH00786 | BUSH 52X80X25 STEPPED&CIRCLIP | 2 |
| *REPLACED BY ANT00079 (BEARING ITEM 13 INCLUDED IN MOULDED ASSEMBLY)* | | | |
| 53 | CSG00049 | SPRING COMP 1.6X11.6X30X10 | 1 |
| 54 | CZB01001 | 1.5MM L SHIM 35X45X1.5 | 2 |
| 55 | CZB02403 | 1.5MM L KNIFE GUARD NET UNIT | 1 |
| 56 | CZB04374 | 1.5MM L NET GEARS GUARD | 1 |
| 58 | CZD02675 | 4MM L MAGNET BRACKET KNIFE | 1 |
| 59 | CZD02676 | 4MM L RESET LEVER BRACKET | 1 |
| 60 | CZD02677 | 4MM L NET COVER HINGE PART | 2 |
| 61 | CZD02678 | 4MM L WASHER PART NET UNIT | 1 |
| 62 | ANT00136 | F5 NET KNIFE PULL ARM WELD ASSEMBLY | 1 |
| *REPLACES CZF04577* | | | |
| 63 | CZF05721 | 6MM L KNIFE RESET HANDLE PART | 1 |
| 65 | CSG00226 | SPRING EXT 4.47X37.5X176X26 | 1 |

## Netter 2 (738)

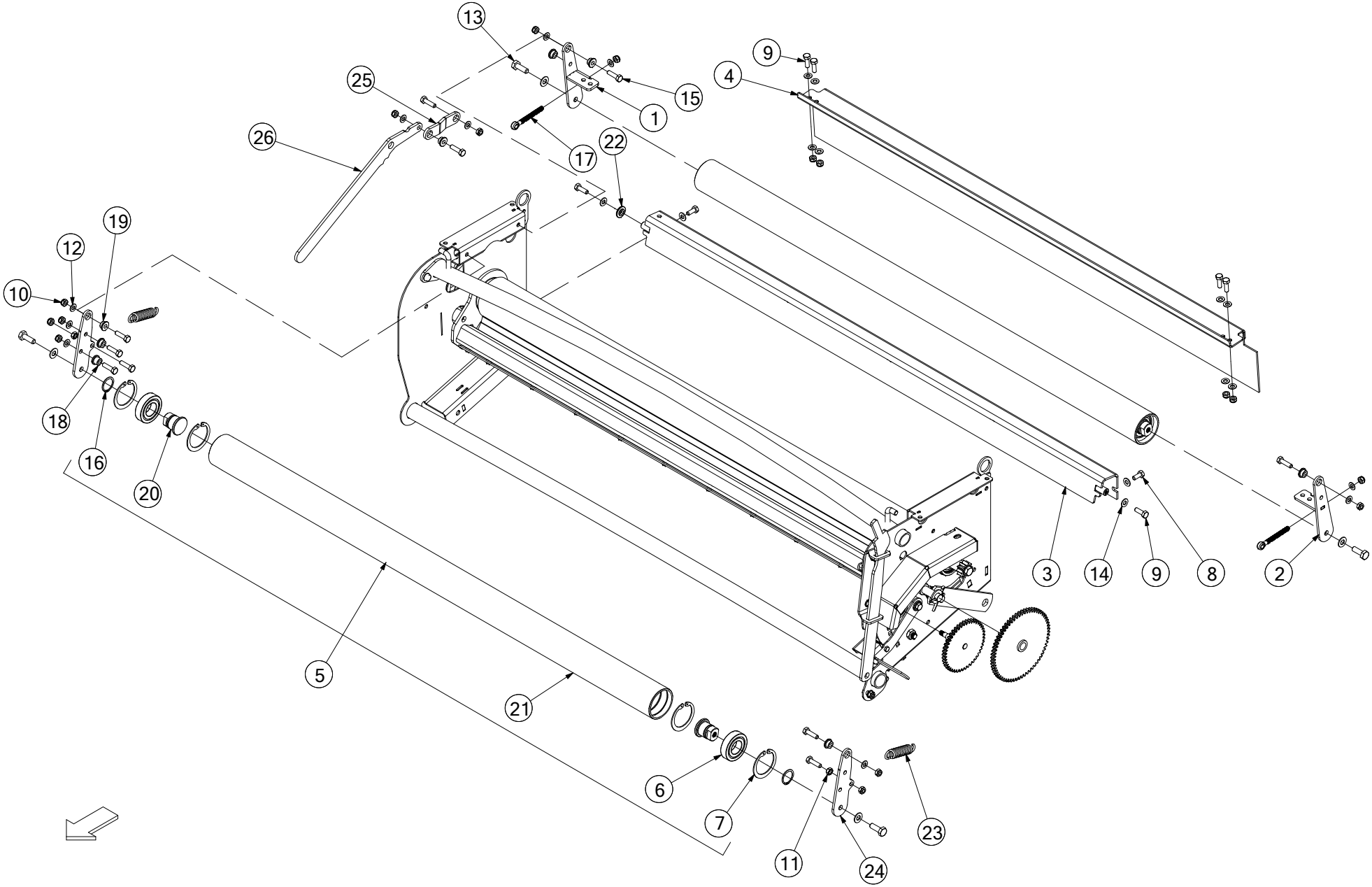

| No. | Part No | Description | Qty |
|---|---|---|---|
| 1 | ACH01132 | ROLLER HINGE ASSY RIGHT | 1 |
| 2 | ACH01133 | ROLLER HINGE ASSY LEFT | 1 |
| 3 | ACH01157 | KNIFE GUARD STRETCH NETTER | 1 |
| 4 | ACH01163 | NETTER ROLLER COVER ASSY | 1 |
| 5 | ARC00270 | ROLLER NET UNIT BACK | 2 |
| 6 | CBR00024 | BEARING 62062RS | 4 |
| 7 | CFA00002 | CIRCLIP INTERNAL 25X1.2 DIN 472 | 8 |
| 8 | CFA00052 | SETSCREW M8X20 Z/P | 7 |
| 9 | CFA00102 | SETSCREW M8X25 Z/P | 7 |
| 10 | CFA00132 | NUT M8 NYLOC Z/P | 21 |
| 11 | CFA00133 | NUT M8 Z/P | 2 |
| 12 | CFA00147 | WASHER FLAT 8MM Z/P | 28 |
| 13 | CFA00230 | SETSCREW M10X30 Z/P | 4 |
| 14 | CFA00249 | WASHER SKM8 | 6 |
| 15 | CFA00316 | BOLT M8X30 Z/P | 10 |
| 16 | CFA00402 | CIRCLIP 30MM EXTERNAL | 4 |
| 17 | CFA00887 | EYE BOLT M8X80 | 2 |
| 18 | CMH00742 | BUSH 8X20X13 ZINC PLATED | 1 |
| 19 | CMH00871 | BUSH 8X20X7 ZP | 7 |
| 20 | CMH01253 | SHAFT STUB FOR ARC00205 | 4 |
| 21 | CMH01409 | ROLLER NET UNIT 70X61X1285 | 2 |
| 22 | CMH01461 | BUSH 8X25X5 ZP | 1 |
| 23 | CSG00231 | SPRING EXT 3.66X20X80X15 B/C | 2 |
| 24 | CZE00222 | ROLLER ASSY NET STRETCH | 2 |
| 25 | CZF05719 | 6MM L LINK ARM NET STRETCH | 1 |
| 26 | CZF05720 | 6MM L LEVER ARM NET UNIT | 1 |

| No. | Part No | Description | Qty |
|---|---|---|---|

# Net Tensioner (740)

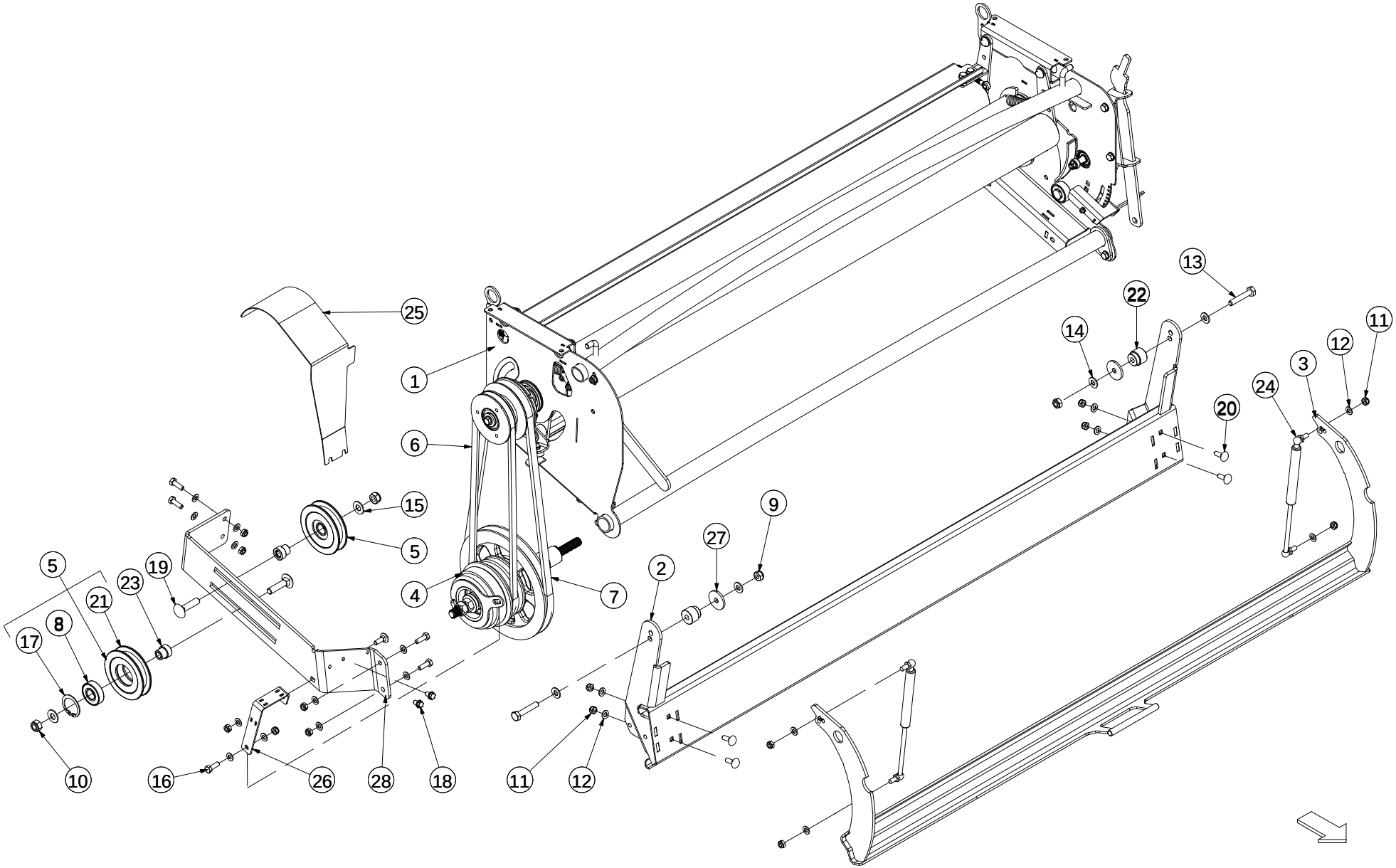

| No. | Part No | Description | Qty |
|---|---|---|---|
| 1 | ADP00268 | NET UNIT POWER STRETCH F5000 | 1 |
| 2 | ALA00474 | NET BOX BACK PLATE ASSY F550 | 1 |
| 3 | ALA00504 | FOLDED BRAKE BAR ASSY F5 / V6 | 1 |
| 4 | ALA00510 | NETTER CLUTCH SHAFT ASSY F5 | 1 |
| 5 | ANT00004 | PULLEY WHEEL BELT TENSIONER ASSY | 2 |
| 6 | CBE00214 | BELT V A44 F5 SERIES | 1 |
| 7 | CBE00241 | BELT SPB 1450 | 1 |
| *USED WITH 250MM PULLEY FROM SERIAL No 707900* | | | |
| 7 | CBE00219 | BELT V B52 F5 SERIES | 1 |
| *USED WITH 224MM PULLEY UP TO SERIAL No 707899* | | | |
| 8 | CBR00020 | BEARING 6204 2RS | 2 |
| 9 | CFA00123 | NUT M10 NYLOC | 2 |
| 10 | CFA00124 | NUT M12 NYLOC | 2 |
| 11 | CFA00132 | NUT M8 NYLOC Z/P | 14 |
| 12 | CFA00147 | WASHER FLAT 8MM Z/P | 19 |
| 13 | CFA00156 | BOLT M10X55 | 2 |
| 14 | CFA00201 | WASHER FLAT 10 MM Z/P | 4 |
| 15 | CFA00250 | WASHER SKM12 | 2 |
| 16 | CFA00407 | BOLT M8X25 Z/P | 5 |
| 17 | CFA00458 | CIRCLIP 47MM INTERNAL | 2 |
| 18 | CFA00492 | SETSCREW M8X12 FLANGED Z/P | 2 |
| 19 | CFA00536 | SETSCREW M12X50 CUP SQ ZP | 2 |
| 20 | CFA00591 | BOLT M8X25 CUP SQ Z/P | 5 |
| 21 | CMH00611 | PULLEY 85MM OD GROOVED | 2 |
| 22 | CMH01212 | BUSH 10.5X30X36 STEPPED 25 | 2 |
| 23 | CMH01362 | BUSH 10X25 STEPPED 20 | 2 |
| 24 | CRA00676 | GAS STRUT 8/18 95 - 285 - 400N | 2 |
| 25 | CZB04368 | 1.5MM L PULLEY GUARD F5 | 1 |
| 26 | CZC04478 | 3MM L CLUTCH HOLDER BRACKET | 1 |
| 27 | CZD00118 | 4MM L CUT& TIE SPACER | 2 |
| 28 | CZF05695 | 6MM L BELT TENSIONER PLATE | 1 |

| No. | Part No | Description | Qty |
|---|---|---|---|

## Netter 1 (903)

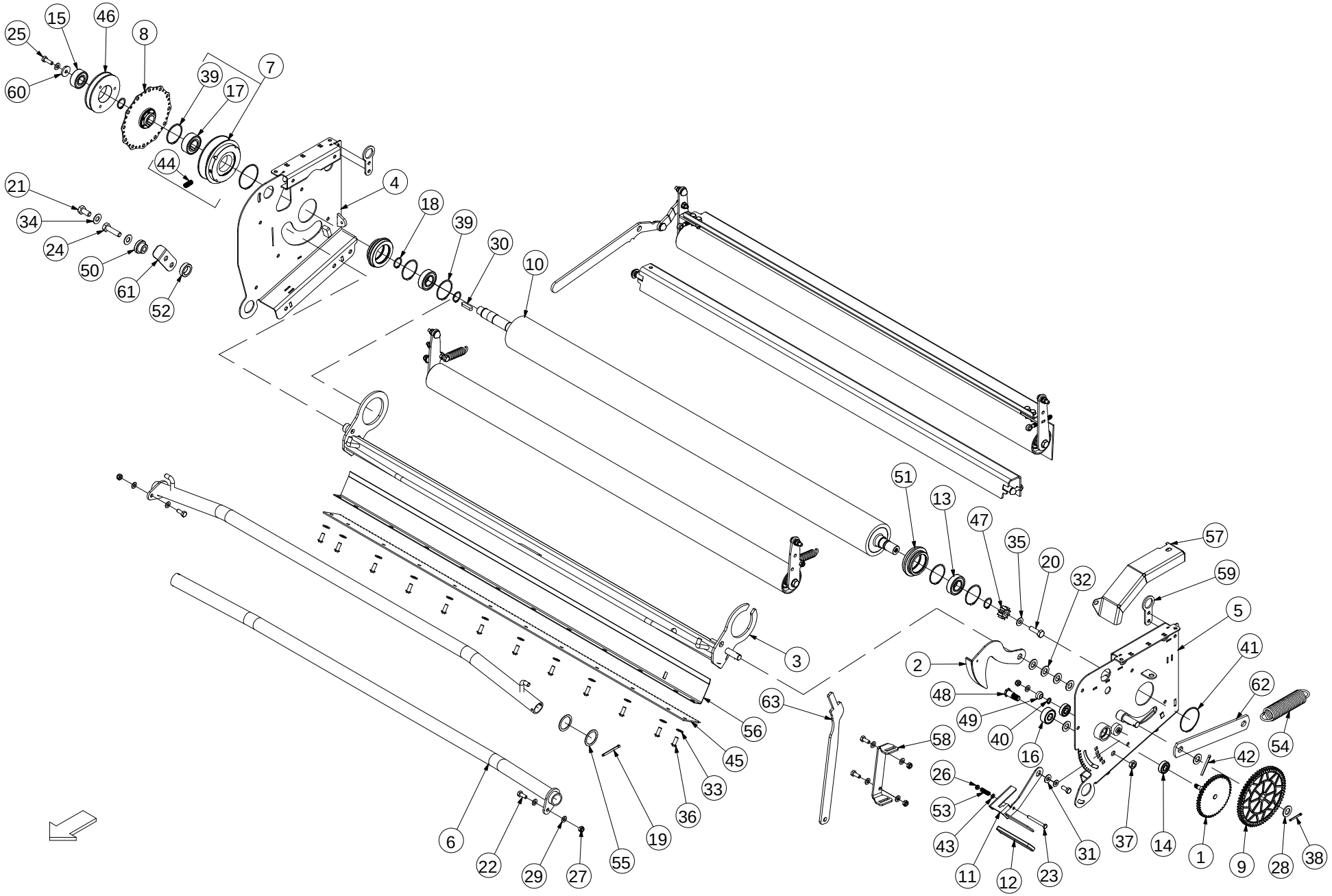

25
15
46
8
60
39
17
7
44
4
21
34
24
50
61
52
18
39
30
10
51
13
47
35
20
32
57
59
5
41
62
54
42
3
2
48
49
40
16
63
58
26
53
43
11
12
23
31
37
14
1
9
28
38
56
45
33
36
19
55
6
22
29
27

| No. | Part No | Description | Qty |
|---|---|---|---|
| 1 | ACH00279 | PLATEWHEEL ASSY. NET UNIT | 1 |
| 2 | ACH00369 | NET RELEASE UNIT ASSY. | 1 |
| 3 | ACH01155 | NET KNIFE WELD ASSY | 1 |
| 4 | ADP00259 | NET STRETCH UNIT WELD RIGHT | 1 |
| 5 | ADP00260 | NET STRETCH UNIT WELD LEFT | 1 |
| 6 | ADP00261 | SPREADER BAR ASSY NET UNIT | 2 |
| 7 | ANT00002 | PULLEY VARIABLE ASSEMBLY | 1 |
| 8 | CTP00390 | 25MM TAPER LOCK BRAKE DISC | 1 |
| *UP TO SERIAL No 709205 (USE KEY 8X7X20 - CFA00883)* | | | |
| 8 | ANT00091 | DISK BRAKE NETTER UNIT C/W KEYWAY | 1 |
| *FROM SERIAL No 709206 (USE KEY 8X7X35 - CFA00157)* | | | |
| 9 | ARC00050 | SPROCKET 64/12 TOOTH ASSY | 1 |
| 10 | ARC00267 | 1300MM DRIVE ROLLER NET UNIT | 1 |
| 11 | ATR00023 | NET LENGTH HANDLE ASSY | 1 |
| 12 | CBE00042 | RUBBER HANDLE NETTER UNIT | 1 |
| 13 | CBR00009 | BEARING 6205 2RS | 2 |
| 14 | CBR00067 | BEARING 6201 | 2 |
| 15 | CBR00084 | BEARING SEALED SPRAG CLUTCH | 1 |
| 16 | CBR00081 | BEARING CAM INA LR 5202 NPPU | 1 |
| *REPLACES CBR00273* | | | |
| 17 | CBR00297 | 25MM SPRAG TYPE OVERRUNNING CLUTCH | 1 |
| 18 | CFA00001 | CIRCLIP 25MM EXTERNAL Z/P | 4 |
| 19 | CFA00013 | SPLIT PIN 5X50 Z/P | 1 |
| 20 | CFA00016 | BOLT M10X35 | 1 |
| 21 | CFA00031 | SETSCREW M12X25 Z/P | 1 |
| 22 | CFA00052 | SETSCREW M8X20 Z/P | 8 |
| 23 | CFA00054 | SETSCREW M6X60 Z/P | 1 |
| 24 | CFA00065 | SETSCREW M12X45 Z/P | 1 |
| 25 | CFA00102 | SETSCREW M8X25 Z/P | 3 |
| 26 | CFA00131 | NUT M6 NYLOC | 1 |
| 27 | CFA00132 | NUT M8 NYLOC Z/P | 15 |
| 28 | CFA00140 | WASHER FLAT 16MM Z/P | 1 |
| 29 | CFA00147 | WASHER FLAT 8MM Z/P | 21 |
| 30 | CFA00157 | KEY 8 X 7 X 35 | 1 |
| *USE KEY 8X7X20 (CFA00883) PRIOR TO SERIAL No 709206 WITH CTP00390* | | | |
| 31 | CFA00201 | WASHER FLAT 10 MM Z/P | 1 |
| 32 | CFA00222 | WASHER FLAT 14MM Z/P | 6 |
| 33 | CFA00249 | WASHER SKM8 | 18 |
| 34 | CFA00250 | WASHER SKM12 | 2 |
| 35 | CFA00251 | WASHER SKM10 | 1 |
| 36 | CFA00429 | SETSCREW M8X20 BUTTON HEAD Z/P | 12 |
| 37 | CFA00446 | NUT M12 HEXAGON LOCK/HALF NUT | 1 |
| 38 | CFA00450 | SPLIT PIN 4 X36 Z/P | 1 |
| 39 | CFA00461 | CIRCLIP 52MM INTERNAL | 5 |
| 40 | CFA00499 | CIRCLIP 10MM EXTERNAL | 1 |
| 41 | CFA00501 | CIRCLIP 65MM EXTERNAL | 2 |
| 42 | CFA00556 | SPLIT PIN 6X50 Z/P | 1 |
| 43 | CFA00641 | WASHER FLAT 6MM NYLON | 1 |
| 44 | CFA01031 | GRUBSCREW M10X25 Z/P | 1 |
| *USE 2x M8X25 GRUBSCREWS (CFA00918) PRIOR TO SERIAL No 709206* | | | |

| No. | Part No | Description | Qty |
|---|---|---|---|
| 45 | CKN00024 | NET KNIFE 1300mm (NEW TYPE) | 1 |
| 46 | ANT00145 | NET PULLEY WHEEL PITCH DIA 100 ASSEM | 1 |
| *COMPLETE WITH SPRAG BEARING ITEM 15 (REPLACES CMH00596 PULLEY ONLY)* | | | |
| 47 | CMH00603 | GEAR SPUR MOD 2.5 10T | 1 |
| 48 | CMH00672 | BOLT SHOULDER 3/4" H | 1 |
| 49 | CMH00705 | BUSH 10X25X10 NYLON | 1 |
| 50 | CMH00771 | BUSH 12X35 STEPPED | 1 |
| 51 | CMH00786 | BUSH 52X80X25 STEPPED&CIRCLIP | 2 |
| *REPLACED BY ANT00079 (BEARING ITEM 13 INCLUDED IN MOULDED ASSEMBLY)* | | | |
| 52 | CMH01555 | BUSH 23X35X10 Z/P NET KNIFE V6 | 1 |
| 53 | CSG00049 | SPRING COMP 1.6X11.6X30X10 | 1 |
| 54 | CSG00226 | SPRING EXT 4.47X37.5X176X26 | 1 |
| 55 | CZB01001 | 1.5MM L SHIM 35X45X1.5 | 2 |
| 56 | CZB02403 | 1.5MM L KNIFE GUARD NET UNIT | 1 |
| 57 | CZB04374 | 1.5MM L NET GEARS GUARD | 1 |
| 58 | CZD02676 | 4MM L RESET LEVER BRACKET | 1 |
| 59 | CZD02677 | 4MM L NET COVER HINGE PART | 2 |
| 60 | CZD02678 | 4MM L WASHER PART NET UNIT | 1 |
| 61 | CZD04844 | 4MM L NET BRAKE LEVER ARM STAY PLATE | 1 |
| 62 | ANT00136 | F5 NET KNIFE PULL ARM WELD ASSEMBLY | 1 |
| *REPLACES CZF04577* | | | |
| 63 | CZF05721 | 6MM L KNIFE RESET HANDLE PART | 1 |

## Netter 2 (856)

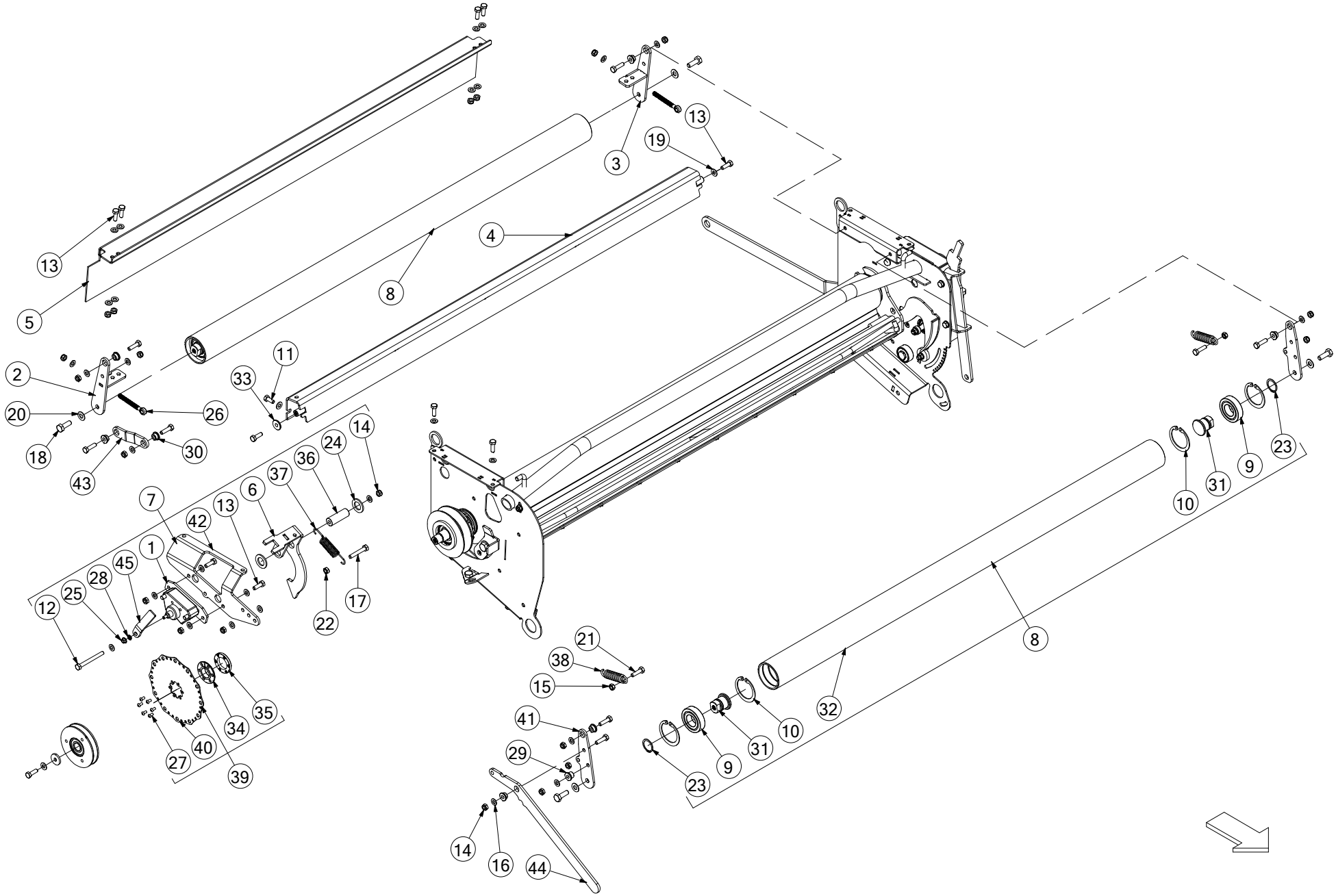
13
5
2
20
18
43
30
26
33
11
8
4
3
19
13
14
24
36
37
6
13
42
7
1
45
28
25
12
22
17
21
38
15
41
29
14
16
44
35
34
40
27
39
23
9
31
10
32
8
23
9
31
10

| No. | Part No | Description | Qty |
|---|---|---|---|
| 1 | ABS00158 | BRAKE CALIPER COMPLETE | 1 |
| 2 | ACH01132 | ROLLER HINGE ASSY RIGHT | 1 |
| 3 | ACH01133 | ROLLER HINGE ASSY LEFT | 1 |
| 4 | ACH01157 | KNIFE GUARD STRETCH NETTER | 1 |
| 5 | ACH01163 | NETTER ROLLER COVER ASSY | 1 |
| 6 | ALA00619 | BRAKE ARM WELD ASSY V6 | 1 |
| *ALSO ORDER ITEM 45 (CZD04937) AS LENGTH HAS CHANGED* | | | |
| 7 | ANT00046 | NET BRAKE/CONTROL F5 | 1 |
| *INCLUDES ITEMS 1, 6, 12, 13, 14, 17, 22, 24, 25, 28, 36, 37, 42 & 45 (ALSO ORDER ITEM 39 TO SUIT MACHINE SERIAL No)* | | | |
| 8 | ARC00270 | ROLLER NET UNIT BACK | 2 |
| *INCLUDES ITEMS 9, 10, 23, 31 & 32* | | | |
| 9 | CBR00024 | BEARING 62062RS | 4 |
| 10 | CFA00002 | CIRCLIP 62MM INTERNAL | 8 |
| 11 | CFA00052 | SETSCREW M8X20 Z/P | 4 |
| 12 | CFA00057 | SETSCREW M8X80 Z/P | 1 |
| 13 | CFA00102 | SETSCREW M8X25 Z/P | 13 |
| 14 | CFA00132 | NUT M8 NYLOC Z/P | 28 |
| 15 | CFA00133 | NUT M8 Z/P | 2 |
| 16 | CFA00147 | WASHER FLAT 8MM Z/P | 40 |
| 17 | CFA00210 | SETSCREW M8X50 Z/P | 1 |
| 18 | CFA00230 | SETSCREW M10X30 Z/P | 4 |
| 19 | CFA00249 | WASHER SKM8 | 5 |
| 20 | CFA00251 | WASHER SKM10 | 4 |
| 21 | CFA00316 | BOLT M8X30 Z/P | 10 |
| 22 | CFA00338 | NUT M8 | 1 |
| 23 | CFA00402 | CIRCLIP 30MM EXTERNAL | 4 |
| 24 | CFA00413 | WASHER FLAT 20MM Z/P | 2 |
| 25 | CFA00131 | NUT M6 NYLOC | 1 |
| 26 | CFA00887 | EYE BOLT M8X80 | 2 |
| 27 | CFA00983 | SETSCREW M5X10 BUTTON HEAD Z/P | 6 |
| 28 | CFA00144 | WASHER FLAT 6MM Z/P | 1 |
| *REPLACES CFA02231 (SERRATED WASHER)* | | | |
| 29 | CMH00742 | BUSH 8X20X13 ZINC PLATED | 1 |
| 30 | CMH00871 | BUSH 8X20X7 ZP | 7 |
| 31 | CMH01253 | SHAFT STUB FOR ARC00205 | 4 |
| 32 | CMH01409 | ROLLER NET UNIT 70X61X1285 | 2 |
| 33 | CMH01461 | BUSH 8X25X5 ZP | 1 |
| 34 | CMH01512 | 25MM TAPER LOCK BRAKE DISC | 1 |
| *ON F5 UP TO SERIAL No 709205 & ON V6 UP TO SERIAL No 801988* | | | |
| 34 | CMH01604 | BUSH FOR DISK BRAKE NETTER UNIT | 1 |
| *ON F5 FROM SERIAL No 709206 & ON V6 FROM SERIAL No 801989* | | | |
| 35 | CMH01513 | 25MM TAPER LOCK BRAKE DISC | 1 |
| *ON F5 UP TO SERIAL No 709205 & ON V6 UP TO SERIAL No 801988* | | | |
| 36 | CMH02568 | 57X20MM SPACER BUSH | 1 |
| 37 | CSG00267 | SPRING EXT 2X18.5X85X25 | 1 |
| *REPLACES CSG00034* | | | |
| 38 | CSG00231 | SPRING EXT 3.66X20X80X15 B/C | 2 |
| 39 | CTP00390 | 25MM TAPER LOCK BRAKE DISC | 1 |
| *ON F5 UP TO SERIAL No 709205 & ON V6 UP TO SERIAL No 801988 (INCLUDES ITEMS 27, 34, 35 & 40)* | | | |
| 39 | ANT00091 | DISK BRAKE NETTER UNIT C/W KEYWAY | 1 |
| *ON F5 FROM SERIAL No 709206 & ON V6 FROM SERIAL No 801989 (INCLUDES ITEMS 27, 34 & 40)* | | | |

| No. | Part No | Description | Qty |
|---|---|---|---|
| 40 | CZC04724 | 1.8MM NETTER BRAKE DISC | 1 |
| 41 | CZE00222 | ROLLER ASSY NET STRETCH | 2 |
| 42 | CZE04323 | 5MM L BRAKE CALIPER BRKT | 1 |
| 43 | CZF05719 | 6MM L LINK ARM NET STRETCH | 1 |
| 44 | CZF05720 | 6MM L LEVER ARM NET UNIT | 1 |
| 45 | CZD04937 | 4MM L BRAKE LEVER ARM | 1 |
| *REPLACES CZF06522* | | | |

## Net tensioner (902)

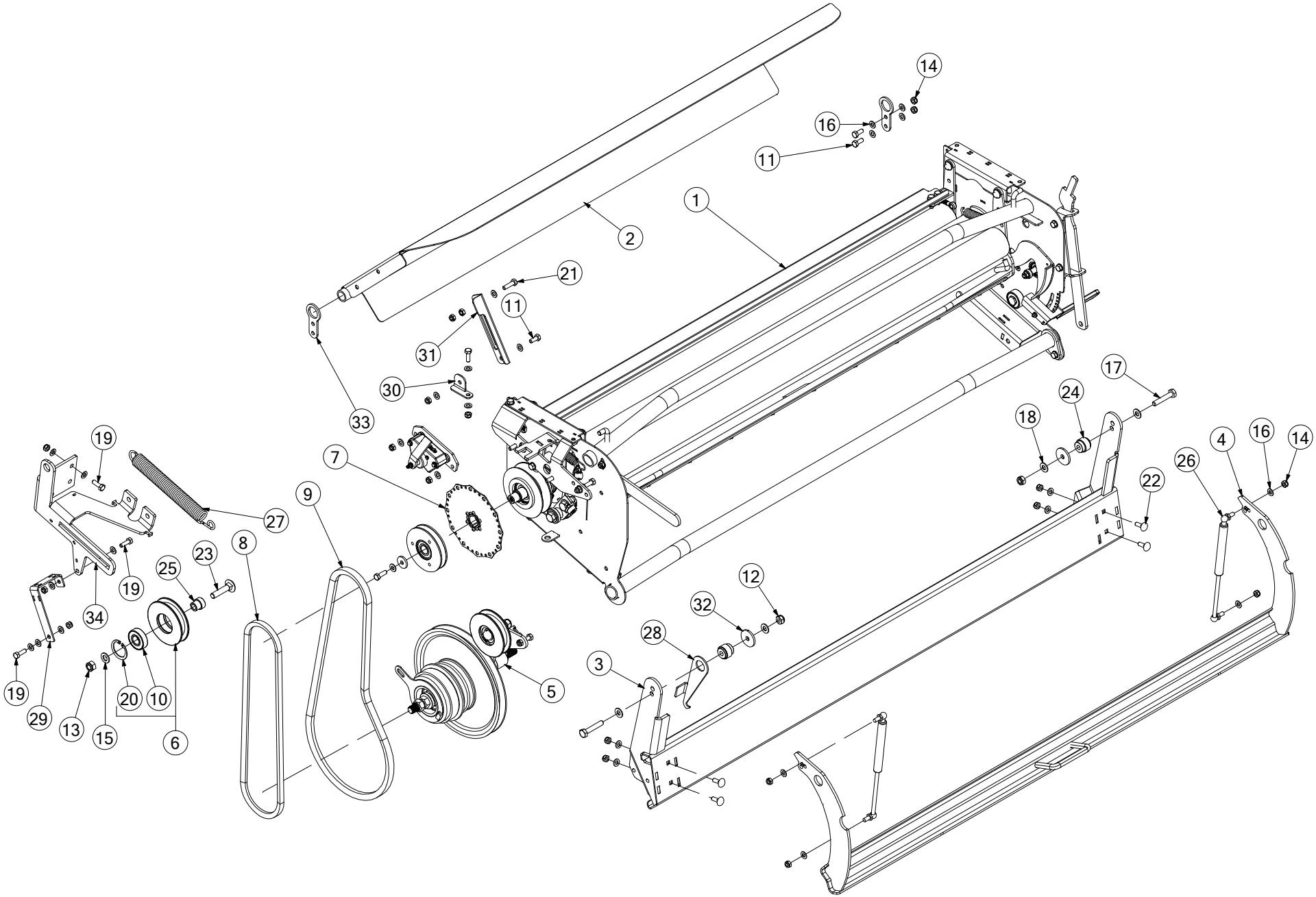

| No. | Part No | Description | Qty |
|---|---|---|---|
| 1 | ADP00268 | NET UNIT POWER STRETCH F5000 | 1 |
| 2 | ANT00042 | F5000 NETTER COVER ASSEMBLY | 1 |
| *ASSEMBLY KIT INCLUDES COVER AGD00004, ITEM 30 & 31 & MTG FASTENERS* | | | |
| 3 | ALA00474 | NET BOX BACK PLATE ASSY F550 | 1 |
| 4 | ALA00504 | FOLDED BRAKE BAR ASSY F5 / V6 | 1 |
| 5 | ALA00510 | NETTER CLUTCH SHAFT ASSY F5 | 1 |
| 6 | ANT00004 | PULLEY WHEEL BELT TENSIONER ASSY | 1 |
| 7 | ANT00091 | DISK BRAKE NETTER UNIT C/W KEYWAY | 1 |
| 8 | CBE00214 | BELT V A44 F5 SERIES | 1 |
| 9 | CBE00241 | BELT SPB 1450 | 1 |
| 10 | CBR00020 | BEARING 6204 2RS | 1 |
| 11 | CFA00052 | SETSCREW M8X20 Z/P | 12 |
| 12 | CFA00123 | NUT M10 NYLOC | 4 |
| 13 | CFA00124 | NUT M12 NYLOC | 1 |
| 14 | CFA00132 | NUT M8 NYLOC Z/P | 31 |
| 15 | CFA00138 | WASHER FLAT 12MM Z/P | 1 |
| 16 | CFA00147 | WASHER FLAT 8MM Z/P | 46 |
| 17 | CFA00156 | BOLT M10X55 | 2 |
| 18 | CFA00201 | WASHER FLAT 10 MM Z/P | 9 |
| 19 | CFA00407 | BOLT M8X25 Z/P | 4 |
| 20 | CFA00458 | CIRCLIP 75MM INTERNAL | 1 |
| 21 | CFA00491 | SETSCREW M8X30 Z/P | 1 |
| 22 | CFA00591 | BOLT M8X25 CUP SQ Z/P | 4 |
| 23 | CFA00670 | BOLT M12X55 CUP SQ Z/P | 1 |
| 24 | CMH01212 | BUSH 10.5X30X36 STEPPED 25 | 2 |
| 25 | CMH01362 | BUSH 10X25 STEPPED 20 | 1 |
| 26 | CRA00676 | GAS STRUT 8/18 95 - 285 - 400N | 2 |
| 27 | CSG00273 | SPRING 30X265X4 CLOSE LOOP PULL | 1 |
| 28 | CZC03669 | 3MM L BELT TENSIONER HOOK F5 SERIES | 1 |
| 29 | CZC04478 | 3MM L CLUTCH HOLDER BRACKET | 1 |
| 30 | CZC04684 | F5000 NETTER COVER STRUT | 1 |
| 31 | CZC04685 | F5000 NETTER COVER STRUT SLIDE | 1 |
| 32 | CZD00118 | 4MM L CUT& TIE SPACER | 2 |
| 33 | CZD02677 | 4MM L NET COVER HINGE PART | 2 |
| 34 | CZF03468 | 6MM L BELT TENSION F5 SERIES | 1 |

| No. | Part No | Description | Qty |
|---|---|---|---|

# Hydraulic layout F5500 (802)

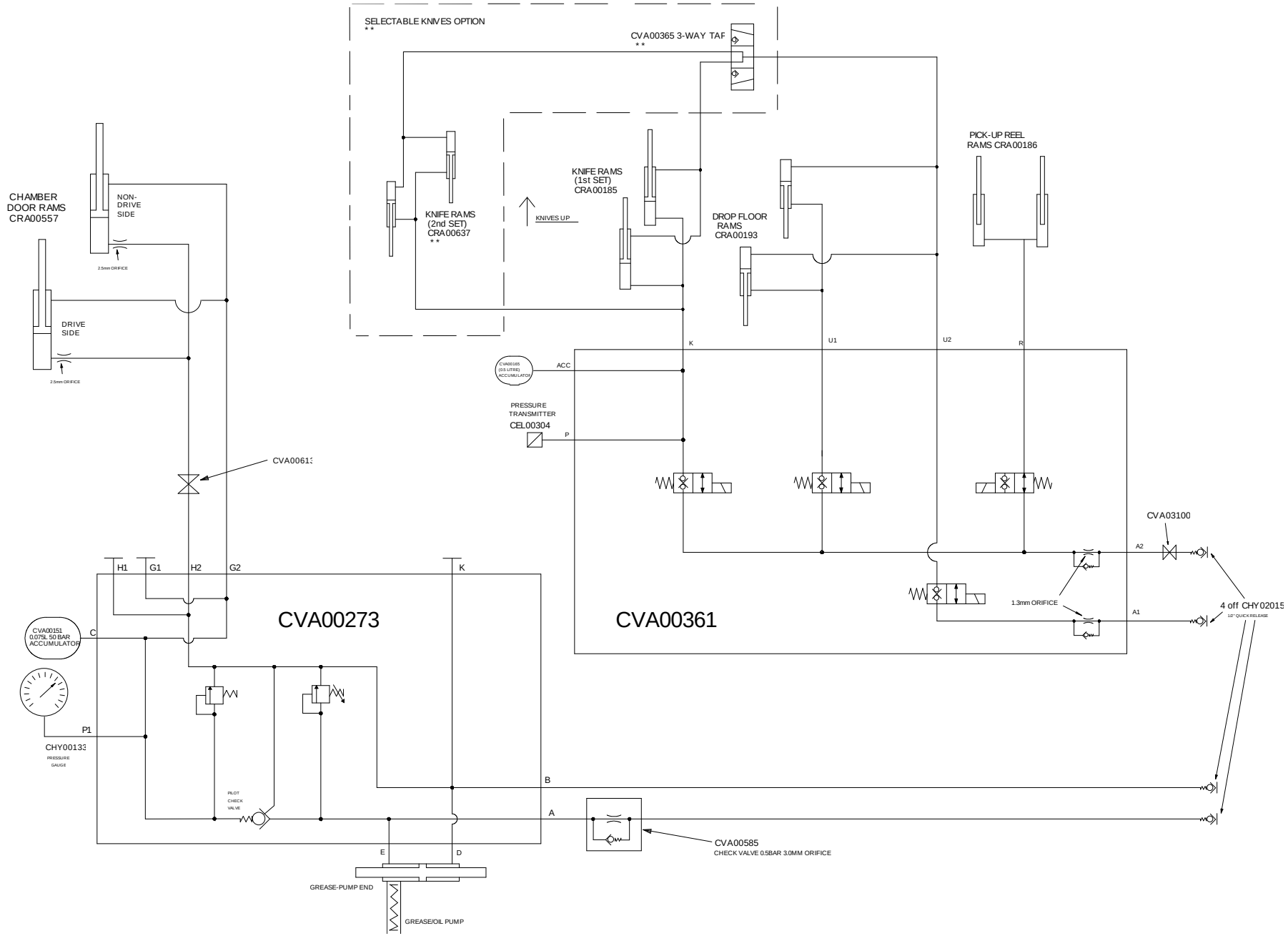

| No. | Part No | Description | Qty |
|---|---|---|---|
| 1 | CVA00361 | VALVE CTRL FLOOR KNIVES V660 2011+ | 1 |
| 2 | CVA00273 | CONTROL VALVE BALER DOOR F5 | 1 |
| 3 | CRA00185 | RAM KNIFE ACTUATION BW | 2 |
| 3 | CRA00713 | RAM KNIFE CHOPPING ADJ END | 1 |
| *ALTERNATIVE OPTION (TO CRA00185) WHICH ALLOWS ADJUSTMENT TO SET KNIFE CUTTING HEIGHT* | | | |
| 4 | CRA00186 | RAM PICKUP BALER | 2 |
| 5 | CRA00193 | RAM CHOPPER FLOOR 20X40 BW | 2 |
| 6 | CRA00557 | RAM 45X32X655 DOOR ST BALER | 2 |
| 7 | CRA00637 | RAM 45X20 SELECT KNIFE | 2 |
| *SELECTABLE KNIVES OPTION ONLY* | | | |
| 8 | CVA00613 | VALVE 3/8" C/W HANDLE LOCK & MTG HOLES | 1 |
| 9 | CVA00365 | TAP BK3 G1/4 06 1123 1 TA-180⊕ | 1 |
| 10 | CVA00585 | VALVE CHECK 3/8" 3MM ORIFICE | 1 |
| 11 | CVA00151 | ACCUMULATOR 0.075 L 50 BAR | 1 |
| 12 | CVA00165 | ACCUMULATOR 0.5 LITRE 25 BAR | 1 |
| 13 | CVA00613 | VALVE 3/8 W LEVER LOCK & HOLES | 1 |
| *REPLACES VALVE CVA03100* | | | |
| 14 | CVA00382 | PUMP GREASE ONLY FOR F5 BALER | 1 |
| *ROUND GREASE PUMP (REPLACES CVA00145 SQUARE GREASE PUMP)* | | | |
| 15 | CEL00304 | PRESSURE TRANSMITTER 0-250BAR M12 | 1 |
| 16 | CHY00133 | GAUGE PRESSURE 63 DIA FLANGE | 1 |
| 16a | CHY02477 | PRESSURE GAUGE HOSE 1200MM | 1 |
| 17 | CHY02015 | QR 1/2" MALE SHIELDED POPPET | 4 |

| No. | Part No | Description | Qty |
|---|---|---|---|

# Valve knives & floor [Used on all F5500 & on V660 from Serial No 800276+] (801)

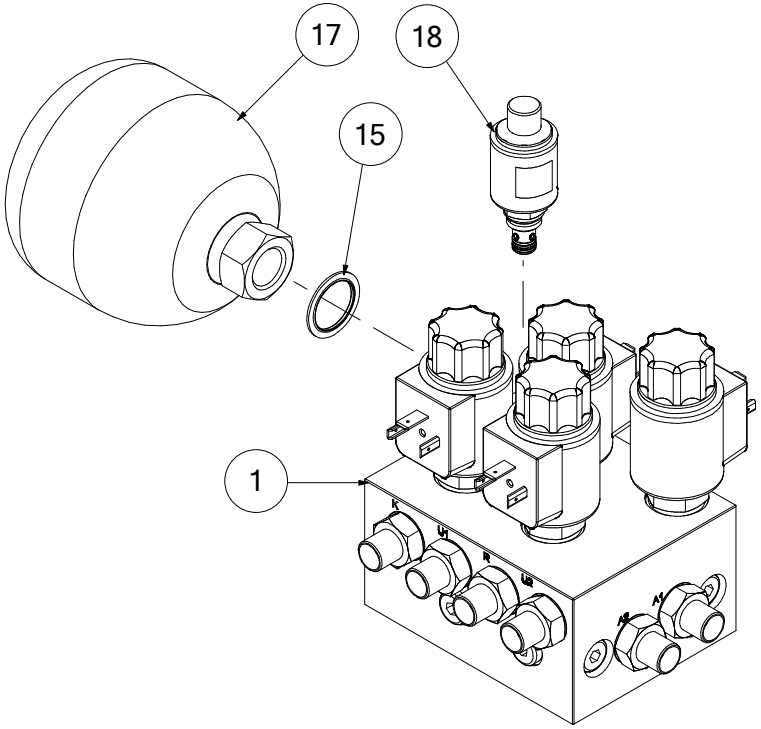


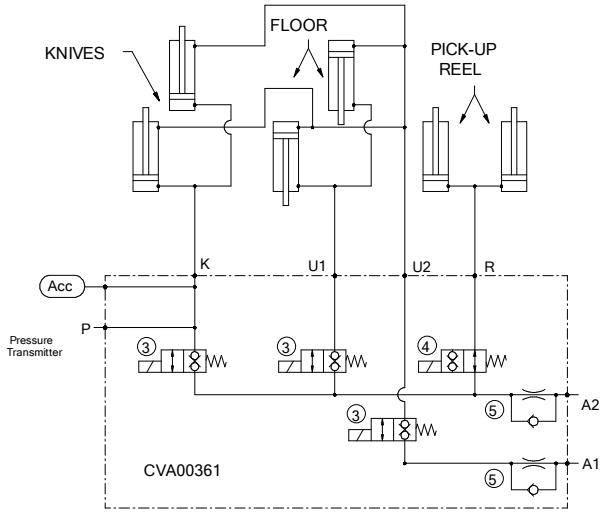


VALVE TORQUE SETTING = 25-30NM

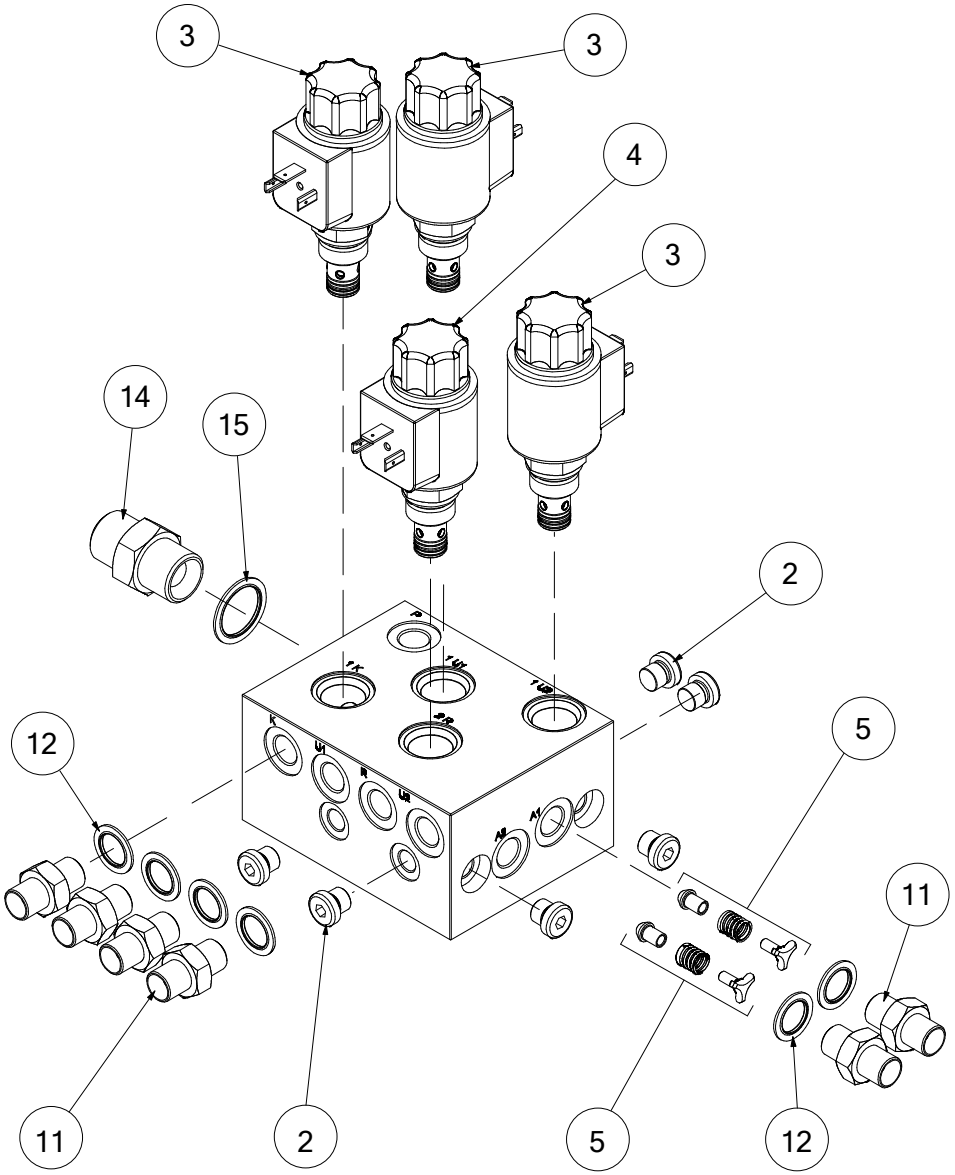

| No. | Part No | Description | Qty |
|---|---|---|---|
| 1 | CVA00361 | VALVE CTRL FLOOR KNIVES 2011+ | 1 |
| *INCLUDES ITEMS 2, 3, 4, 5, 11, 12, 14 & 15* | | | |
| 2 | CVA00553 | BLANKING CAP 1/8" | 6 |
| 3 | CVA00338 | VALVE CTE DOUBLE CHECK NC | 3 |
| 4 | CVA00602 | VALVE CTE DOUBLE CHECK NO | 1 |
| 5 | CVA00603 | VALVE CHECK ASM | 2 |
| 11 | CHY02010 | ADAPTOR 1/4" BSP M/M | 6 |
| 12 | CHY00015 | WASHER DOWTY 1/4" | 6 |
| 14 | CHY02013 | ADAPTOR 1/2" BSP M/M | 1 |
| 15 | CHY00053 | WASHER DOWTY 1/2" | 2 |
| 17 | CVA00165 | ACCUMULATOR 0.5 LITRE 25 BAR | 1 |
| *NOT PART OF VALVE ASM - MUST BE ORDERED SEPARATELY* | | | |
| 18 | CEL00304 | PRESSURE TRANSMITTER 0-250BAR M12 | 1 |
| *NOT PART OF VALVE ASM - MUST BE ORDERED SEPARATELY* | | | |

| No. | Part No | Description | Qty |
|---|---|---|---|

## *Hydraulic valve chamber door (178)*

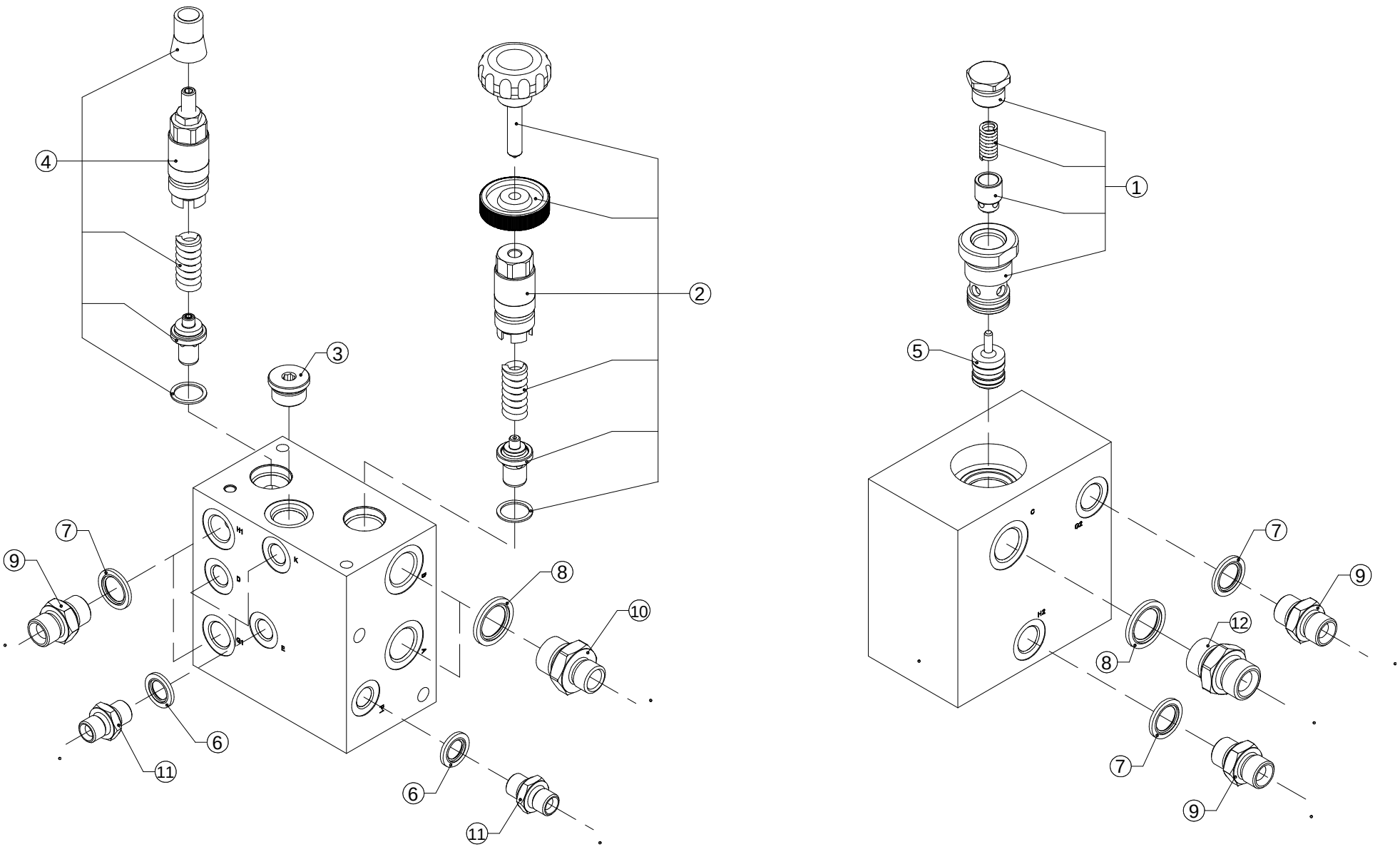

| No. | Part No | Description | Qty |
|---|---|---|---|
| 0 | CVA00273 | CONTROL VALVE BALER DOOR F5 | 1 |
| *COMPLETE ASSEMBLY INCLUDES ITEMS 1 THROUGH 12* | | | |
| 1 | CVA00269 | CHECK VALVE CARTRIDGE CVA00239 | 1 |
| 2 | CVA00320 | VALVE CTE RELIEF HAND KNOB | 1 |
| 3 | CVA00557 | PLUG BSP 1/4 ALLEN HD +SEAL SAE08 | 1 |
| 4 | CVA00560 | RELIEF VALVE ASSY | 1 |
| 5 | CVA00562 | PISTON | 1 |
| 6 | CHY00015 | WASHER DOWTY 1/4" | 4 |
| 7 | CHY00020 | WASHER DOWTY 3/8" | 4 |
| 8 | CHY00053 | WASHER DOWTY 1/2" | 3 |
| 9 | CHY02002 | ADAPTOR 3/8" BSP M/M | 4 |
| 10 | CHY02008 | ADAPTOR 1/2" M 3/8" M | 2 |
| 11 | CHY02010 | ADAPTOR 1/4" BSP M/M | 4 |
| 12 | CHY02013 | ADAPTOR 1/2" BSP M/M | 1 |

| No. | Part No | Description | Qty |
|---|---|---|---|

## ***Hydraulic rams pick-up reel CRA00186 (182)***

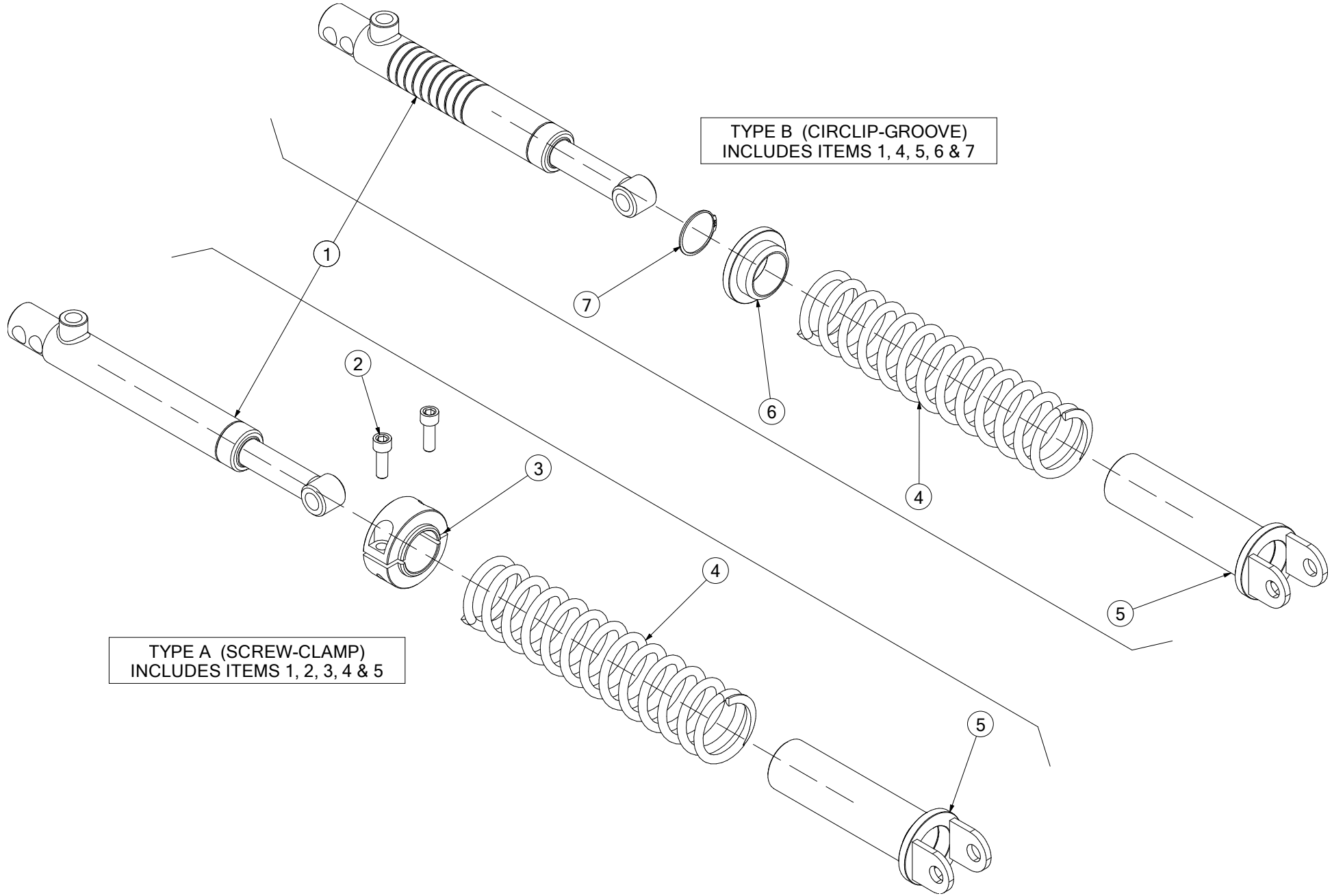

| No. | Part No | Description | Qty |
|---|---|---|---|
| 1 | CRA00186 | RAM PICKUP BALER | 1 |
| *COMPLETE RAM ASSEMBLY (MAY BE TYPE A OR TYPE B) CAN ALSO USE CRA00292 AS A DIRECT REPLACEMENT* | | | |
| 1 | CRA00292 | RAM PICK UP REEL ( CAMLESS ) | 1 |
| *MUST BE USED WITH CAMLESS PICK-UP (CAN ALSO BE USED ON STD PICK-UP INSTEAD OF CRA00186)* | | | |
| 2 | CFA00602 | SETSCREW M10X30 SOC CAP Z/P | 2 |
| *RAM TYPE A ONLY* | | | |
| 3 | ACH00405 | SPRING RETAINER RAM PICKUP | 1 |
| *RAM TYPE A ONLY* | | | |
| 4 | CSG00037 | SPRING COMP 8X67X300X14 | 1 |
| 5 | ACH00404 | SPRING RETAINER PICKUP | 1 |
| 6 | CPT00073 | SPRING RETAINER FOR CRA00186 | 1 |
| *RAM TYPE B ONLY* | | | |
| 7 | CFA00551 | CIRCLIP 40MM EXTERNAL | 1 |
| *RAM TYPE B ONLY* | | | |

| No. | Part No | Description | Qty |
|---|---|---|---|

## ***Hydraulic rams chamber door CRA00557 (183)***

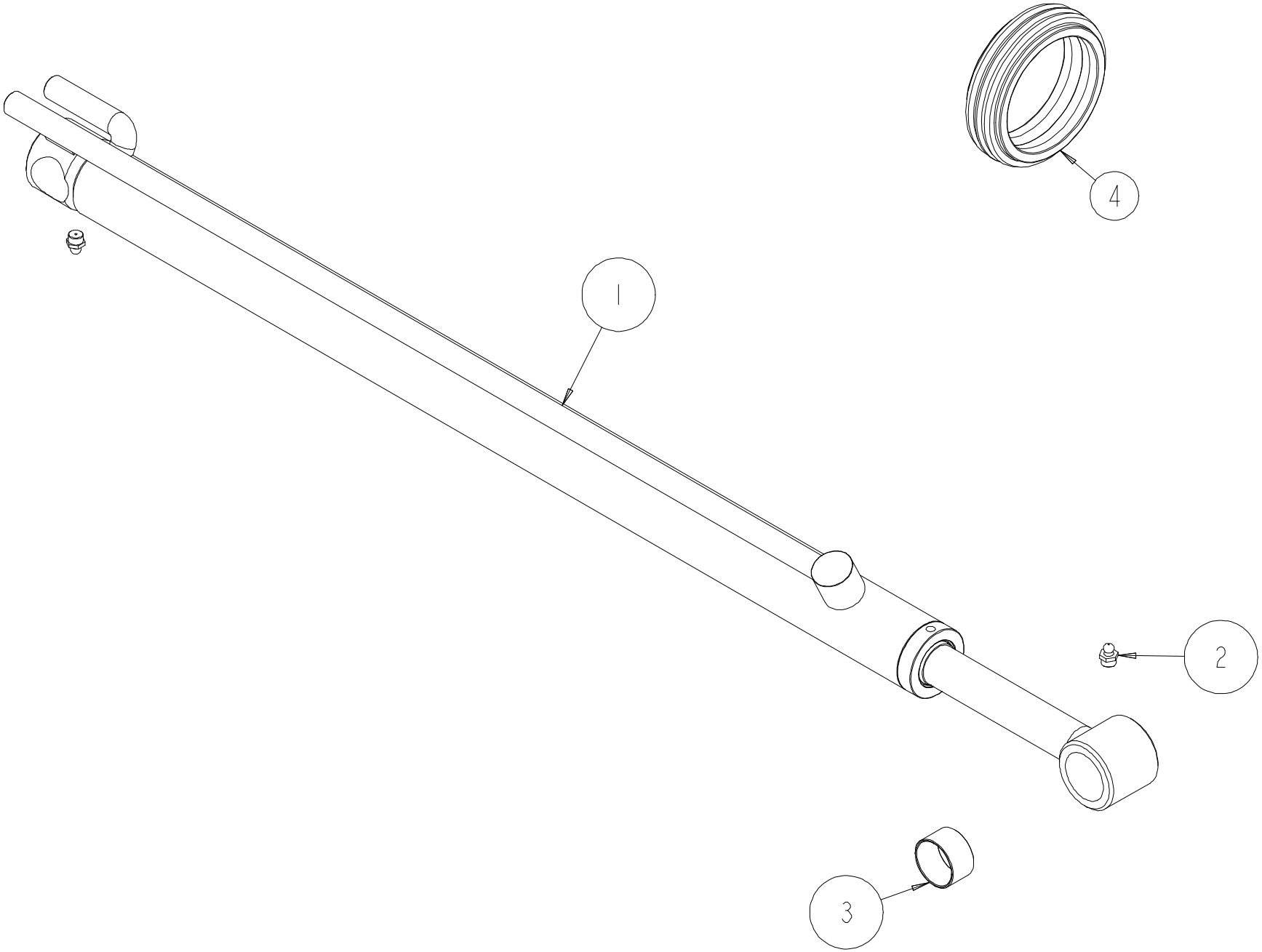

| No. | Part No | Description | Qty |
|---|---|---|---|
| 1 | CRA00242 | DOOR RAM F550 | 1 |
| *UP TO SERIAL NO. 702164.* | | | |
| 1 | CRA00557 | DOOR RAM F550 | 1 |
| *FROM SERIAL NO. 702165.* | | | |
| 2 | CFA00111 | GREASE NIPPLE M10X1.5 STRAIGHT | 1 |
| 3 | CBR00101 | BEARING GLACIER PM 2525 DX | 1 |
| *UP TO SERIAL NO. 702164.* | | | |
| 3 | CBR00260 | BEARING GLACIER PM 3220 DX | 1 |
| *FROM SERIAL NO. 702165.* | | | |
| 4 | CSE00147 | F550 DOOR RAM SEAL KIT | 1 |

| No. | Part No | Description | Qty |
|---|---|---|---|

# Oil & Grease systems 1 (186)

Components:

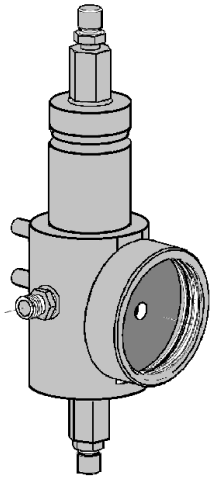

1

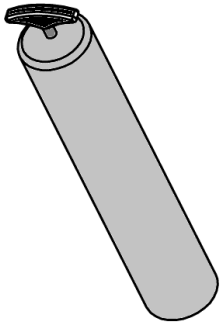

2

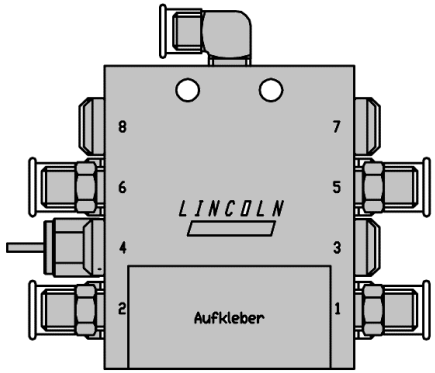


3

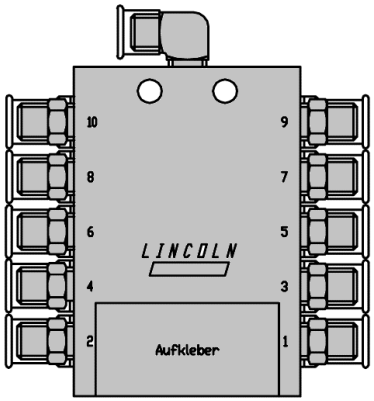


4

Fittings:

12

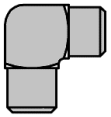

13

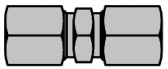

14

15

16

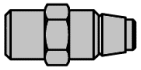

17

18

19

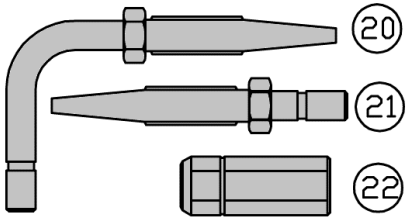

20

21

22

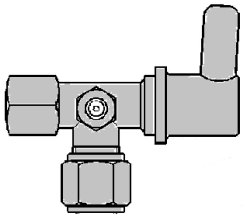

23

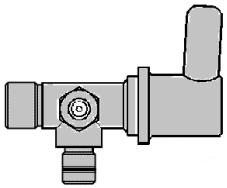

24

25

26

| No. | Part No | Description | Qty |
|---|---|---|---|
| 1 | CVA00382 | PUMP GREASE ONLY FOR F5 BALER | 1 |
| 2 | CVA00184 | GREASE GUN CARTRIDGE HOUSING | 1 |
| 3 | CVA00167 | GREASE MASTER 8-WAY | 1 |
| 4 | CVA00166 | GREASE BLOCK 10-WAY | 4 |
| 12 | CFA00549 | 6LL FITTING STRAIGHT | 1 |
| 13 | CFA00543 | 6LL FITTING ELBOW | 1 |
| 14 | CFA00681 | 6LL UNION (COMPLETE) | 1 |
| 15 | CFA00682 | COMPRESSION NUT | 1 |
| 16 | CFA00544 | 6LL COUPLING NUT | 1 |
| 17 | CVA00172 | VALVE CHECK 1/8" - M6LL BODY | 1 |
| 18 | CFA00683 | BRASS OLIVE | 1 |
| 19 | CFA00545 | STEEL OLIVE | 1 |
| 20 | CHY02323 | HOSE STUD ELBOW | 1 |
| 21 | CHY02324 | HOSE STUD STRAIGHT | 1 |
| 22 | CHY02325 | THREADED SLEEVE | 1 |
| 23 | CHY02612 | VALVE SVTE MANUALGREASE NIPPLE | 1 |
| 24 | CHY02986 | VALVE SVTS-350-R1/8 MANUAL GREASE NIPPLE | 1 |
| 25 | CHY01061 | OIL WICK KIT FULL BALER RANGE | 1 |
| *CONTAINS 4 SEPARATE WICKS FOR ANY MCHALE BALER MODEL (REPLACES CHY00609 SINGLE WICK)* | | | |
| 26 | CHY02370 | SPARES KIT FOR OIL GREASER | 1 |

| No. | Part No | Description | Qty |
|---|---|---|---|

## Oil & Grease systems 2 (187)

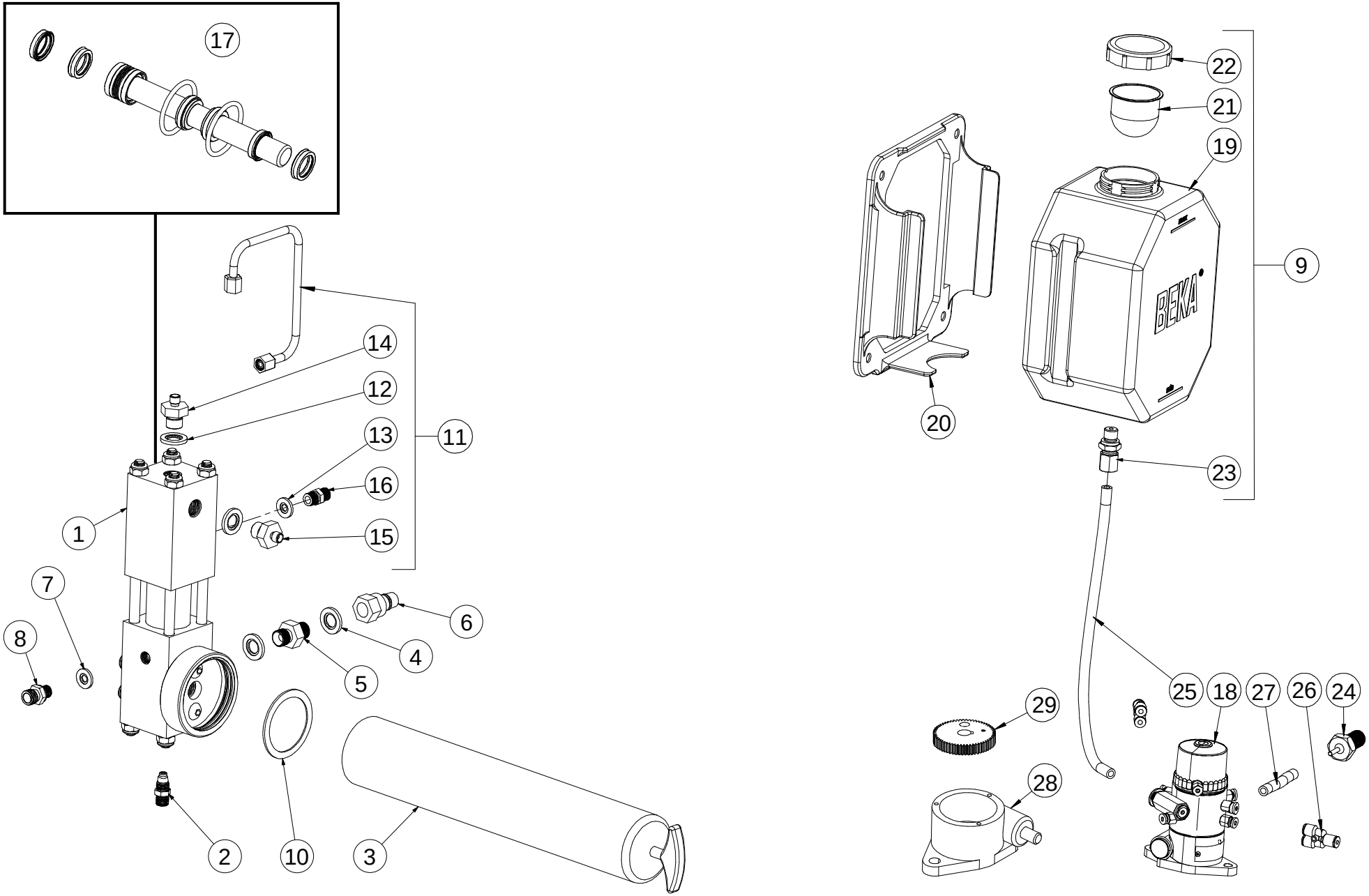

| No. | Part No | Description | Qty |
|---|---|---|---|
| 1 | CVA00382 | PUMP GREASE ONLY FOR F5 BALER<br>*ROUND GREASE PUMP (REPLACES CVA00145 SQUARE GREASE PUMP SHOWN)* | 1 |
| 2 | CVA00172 | VALVE CHECK 1/8" - M6LL BODY | 1 |
| 3 | CVA00184 | GREASE GUN CARTRIDGE HOUSING | 1 |
| 4 | CHY00015 | WASHER DOWTY 1/4" | 2 |
| 5 | CHY02010 | ADAPTOR 1/4" BSP M/M | 1 |
| 6 | CHY02328 | QUICK RELEASE 1/4" MALE | 1 |
| 7 | CHY00195 | WASHER DOWTY 1/8" | 1 |
| 8 | CHY00198 | 1/8" TO 12X1MM M-M BSP/METRIC | 1 |
| 9 | CHY00868 | BEKA OIL TANK ASSY<br>*INCLUDES ITEMS 19 TO 23* | 1 |
| 10 | CSE00613 | SEAL GREASE CARTRIDGE | 1 |
| 11 | REP00039 | REPAIR KIT INCREASE GREASE USAGE<br>*INCLUDES ITEMS 12 TO 16* | 1 |
| 12 | CHY00015 | WASHER DOWTY 1/4" | 2 |
| 13 | CHY00195 | WASHER DOWTY 1/8" | 1 |
| 14 | CHY02528 | HYD ADAPTOR M/M 1/4"-6L | 1 |
| 15 | CHY02529 | HYD ADAPTOR M/M 1/4" 1/8" | 1 |
| 16 | CFA00779 | FITTING 1/8"-6L ADAPTOR | 1 |
| 17 | CRA00563 | PISTON KIT OILER GREASER | 1 |
| 18 | CVA00564 | BEKA OIL PUMP | 1 |
| 18a | CBC00024 | SCREW CAP BLACK FOR CVA00564<br>*REPLACEMENT BLACK SCREW CAP FOR TOP OF BEKA OIL PUMP* | 1 |
| 18b | CVA10044 | THREADED ADJUSTER BEKA OIL PUMP<br>*REPLACEMENT THREADED ADJUSTER FOR BEKA OIL PUMP* | AR |
| 19 | CHY00869 | BEKA OIL TANK | 1 |
| 20 | CHY00870 | BEKA OIL TANK BRACKET | 1 |
| 21 | CHY00871 | BEKA OIL TANK FILTER | 1 |
| 22 | CHY00872 | BEKA OIL TANK CAP | 1 |
| 23 | CHY00873 | BEKA OIL TANK FITTING | 1 |
| 24 | CVA00563 | BEKA OIL PUMP DRIVE | 1 |
| 25 | CHY00892 | TUBE 10X8X300 OILER TANK | 1 |
| 25a | CVA10046 | PUSH FITTING 10 G 1/8 BEKA OIL PUMP | 1 |
| 26 | CHY00893 | BEKA OILER TEE PIECE | 2 |
| 27 | CBE00172 | BEKA OIL PUMP DRIVE LINE PIPE | 1 |
| 27a | CFA00644 | JUBILEE CLIP 13MM-20MM | 2 |
| 28 | CVA00573 | BEKA OIL PUMP GEARBOX<br>*REPLACEMENT BASE UNIT FOR BEKA OIL PUMP CVA00564* | 1 |
| 29 | CVA00574 | BEKA OIL PUMP SPUR GEAR<br>*REPLACEMENT SPUR GEAR FOR BEKA OIL PUMP CVA00564* | 1 |
| 30 | CHY02881 | POLYAMIDE 4MM FLEXI OILER PIPE | AR |
| 30a | CVA10045 | PUSH FITTING 4 G 1/8 BEKA OIL PUMP | AR |
| 31 | CHY01061 | OIL WICK KIT FULL BALER RANGE<br>*CONTAINS 4 SEPARATE WICKS FOR ANY MCHALE BALER MODEL (REPLACES CHY00609 SINGLE WICK)* | 1 |

| No. | Part No | Description | Qty |
|---|---|---|---|

## *Electrical control [Up to Serial No 709205] (759)*

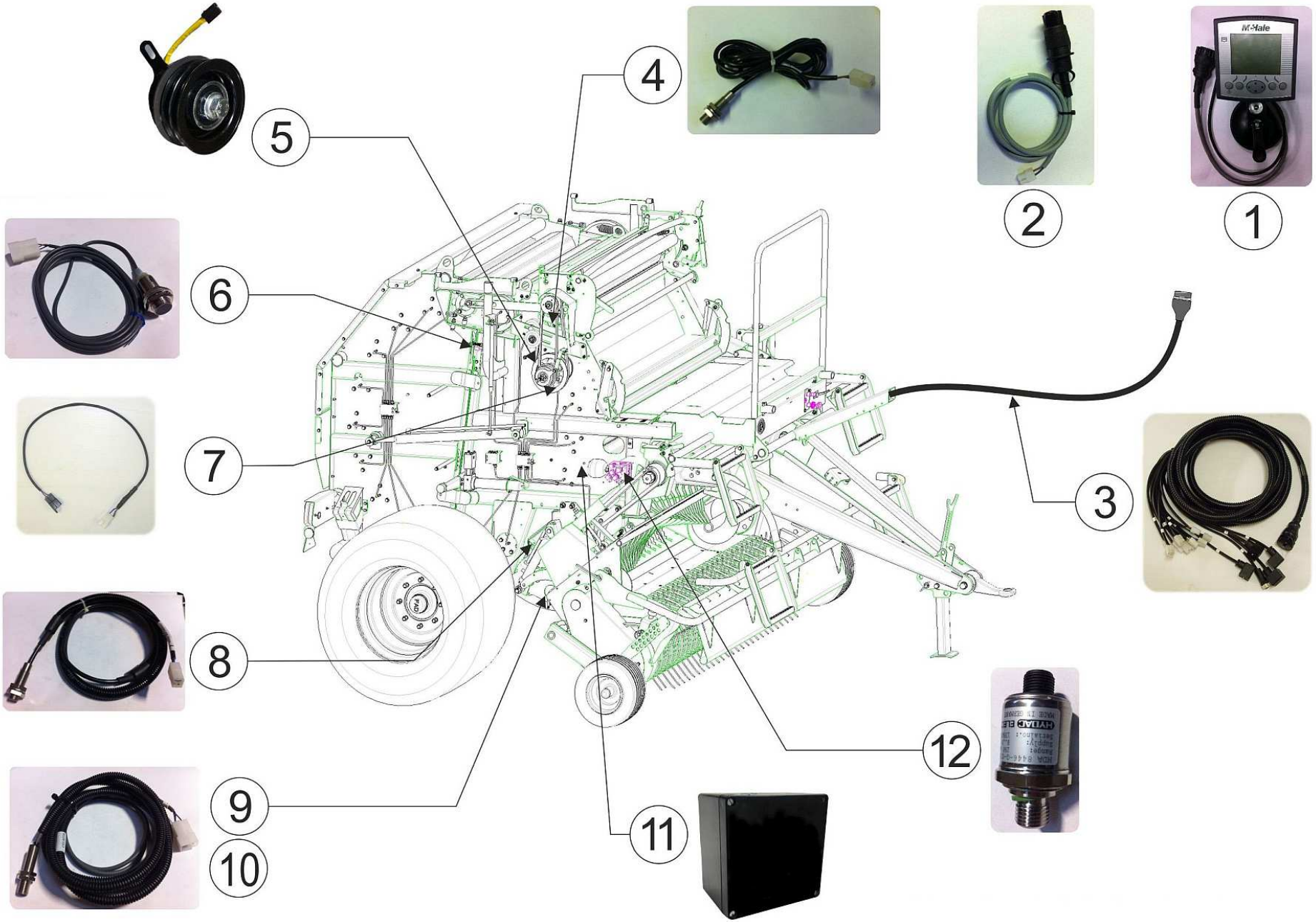

| No. | Part No | Description | Qty |
|---|---|---|---|
| 1 | CEL00692 | G-WIZ CONTROL UNIT | 1 |
| 2 | CEL00064 | EURO LEAD | 1 |
| 3 | CEL00683 | LOOM G-WIZ F5500 37 WAY CPC | 1 |
| 4 | CEL00262 | SENSOR 1.8M NETTER F5 BALER | 1 |
| 5 | CEL00259 | MAGNETIC CLUTCH UNIT 12V | 1 |
| 6 | CEL00616 | SENSOR ASSY PROXIMITY 18MM NPN | 1 |
| 7 | CEL00211 | LOOM CLUTCH NET UNIT | 1 |
| 8 | CEL00743 | SENSOR MAGNETIC 800MM ARMOURED | 1 |
| 9 | CEL00718 | SENSOR ASSY PROXIMITY 4MM RANGE | 1 |
| 10 | CEL00722 | SENSOR ASSY PROXIMITY 4MM RANGE | 1 |
| *USED ON SELECTABLE KNIFE MACHINES ONLY* | | | |
| 11 | CEL00883 | JUNCTION BOX ABS PLASTIC GREY (120X120X80) | 1 |
| 12 | CEL00304 | PRESSURE TRANSMITTER 0-250BAR M12 | 1 |

| No. | Part No | Description | Qty |
|---|---|---|---|

## Electrical control [From Serial No 709206] (946)

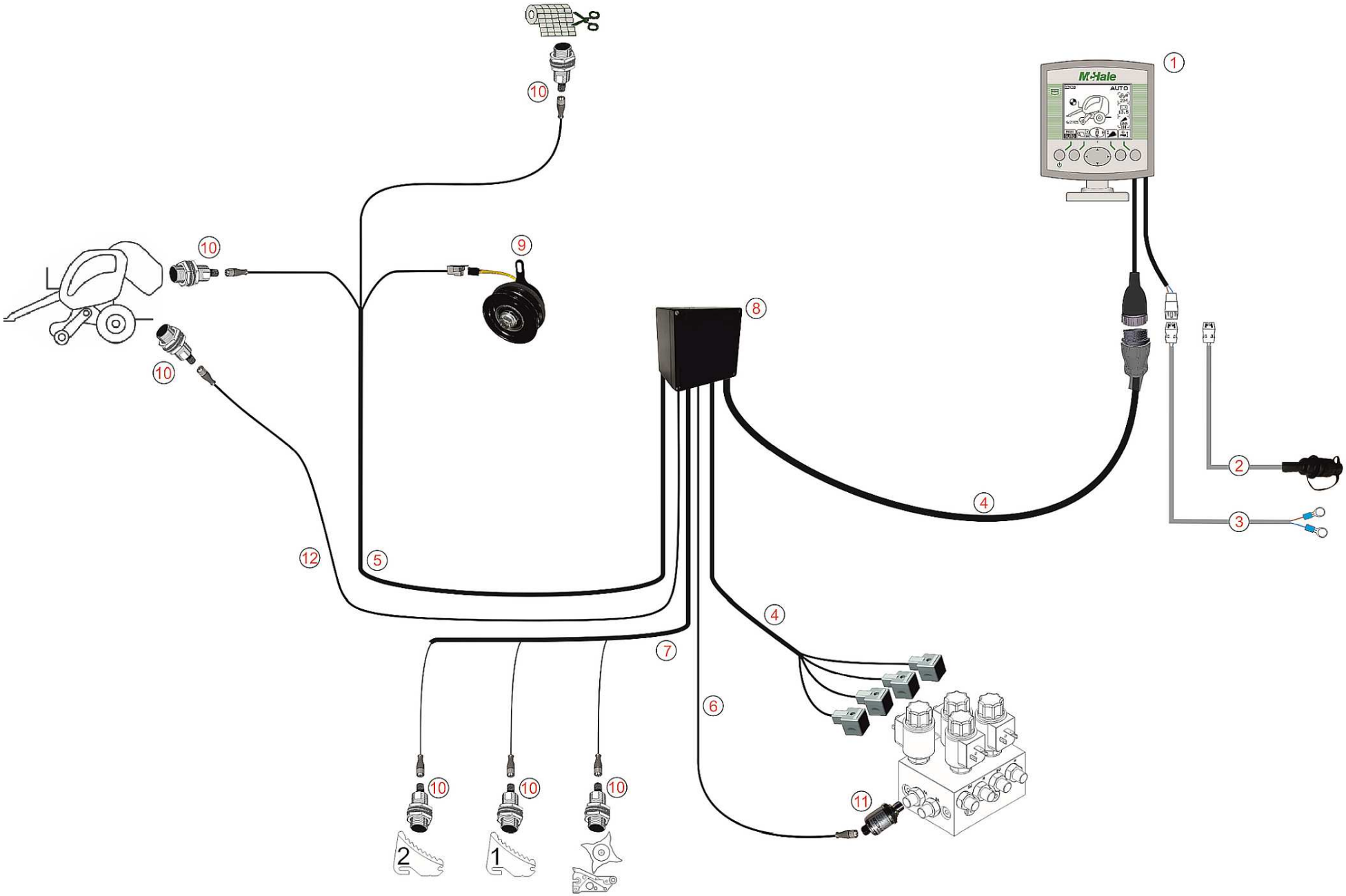

| No. | Part No | Description | Qty |
|---|---|---|---|
| 1 | CEL00692 | G-WIZ CONTROL UNIT | 1 |
| 2 | CEL00064 | LOOM COBO WHITE CON EURO LEAD | 1 |
| 3 | CEL00031 | BATTERY TO CONTROL UNIT POWER LEAD | 1 |
| 4 | CEL00934 | F5500 MAIN LOOM SERIAL 709206+ | 1 |
| 5 | CEL00935 | F5500 CHAMBER LOOM SERIAL 709206+ | 1 |
| 6 | CEL00936 | M12-AMP PRESS. SENSOR CABLE 1M | 1 |
| 7a | CEL00905 | V6 MK3 KNIFE/FLOOR SENSOR LOOM | 1 |
| *USED ON STANDARD KNIFE MACHINES ONLY* | | | |
| 7b | CEL00910 | V6 MK3 SELECT KNIFE SENS LOOM | 1 |
| *USED ON SELECTABLE KNIFE MACHINES ONLY* | | | |
| 8 | CEL00883 | JUNCTION BOX ABS PLASTIC GREY (120X120X80) | 1 |
| 9 | CEL00259 | MAGNETIC CLUTCH UNIT 12V | 1 |
| 10 | CEL00767 | SENSOR M18 PROX M12 PLUG | 4 |
| *INCREASE QTY BY 1 WITH EITHER SELECTABLE KNIVES OR OPTIONAL BALE KICKER SENSOR* | | | |
| 11 | CEL00304 | PRESSURE TRANSMITTER 0-250BAR M12 | 1 |
| 12 | CEL00992 | ADAPTER M12 - 6WAY AMP 2500MM | 1 |
| *USED WITH OPTIONAL BALE KICKER SENSOR ONLY* | | | |

| No. | Part No | Description | Qty |
|---|---|---|---|

## G-Wiz control unit (1076)

| No. | Part No | Description | Qty |
|---|---|---|---|
| 1 | CEL00692 | CTRL G-WIZ F5 | 1 |
| 1 | CEL00920 | CTRL G-WIZ F5 RECON | 1 |
| 1 | CEL00908 | CTRL G-WIZ V640 | 1 |
| *USED ON V640 MACHINES BETWEEN SERIAL No 801350 & 805000* | | | |
| 1 | CEL00921 | CTRL G-WIZ V640 RECON | 1 |
| *USED ON V640 MACHINES BETWEEN SERIAL No 801350 & 805000* | | | |
| 2 | CEL00747 | OVERLAY SCREEN G-WIZ | 1 |
| 3 | CEL00379 | G-WIZ CONTROL UNIT SCREEN | 1 |
| 4 | CEL01517 | G-WIZ CONTROL UNIT BUZZER | 1 |
| *BUZZER VOLUME IS REDUCED SIGNIFICANTLY BY FITTING GROMMET (ITEM 18)* | | | |
| 5 | CEL00380 | G-WIZ KEYPAD MEMBRANE | 1 |
| 6 | CEL00064 | LOOM COBO WHITE CON EURO LEAD | 1 |
| 6 | CEL01581 | POWER LEAD USA | 1 |
| *NORTH AMERICA ONLY* | | | |
| 7 | CEL00010 | EURO SOCKET TO BATT POWER LEAD | 1 |
| 8 | CEL00762 | SOFTWARE UPLOAD CABLE G-WIZ | 1 |
| 9 | CEL00031 | BAT POWER LEAD CTRL BOX DIRECT | 1 |
| 10 | KST00070 | CONTROL UNIT MOUNTING BRACKETS | 1 |
| 11 | CPL00007 | VACUUM PAD FLAT BACK | 1 |
| 12 | CEL00027 | TERM CRIMP TAB AMP NO 42565-2 | 1 |
| 13 | CEL00098 | CON HSG TAB 2 WAY AMP 180924-0 | 1 |
| 14 | CEL00333 | BACKSHELL, TYCO/AMP, CPC | 1 |
| 15 | CEL00335 | CRIMP SOCKET, TIN CPC 24-20AWG | 1 |
| 16 | CEL00331 | CONN. SOCKET HOUSING CPC 37WAY | 1 |
| 17 | CEL00365 | CTRL UNIT CONNECTOR LOCK RING | 1 |
| 18 | CFA02383 | G-WIZ BUZZER GROMMET | 1 |
| *(ITEM 4) BUZZER VOLUME IS REDUCED SIGNIFICANTLY BY FITTING THIS GROMMET* | | | |

| No. | Part No | Description | Qty |
|---|---|---|---|

## *Electrical lighting kit (760)*

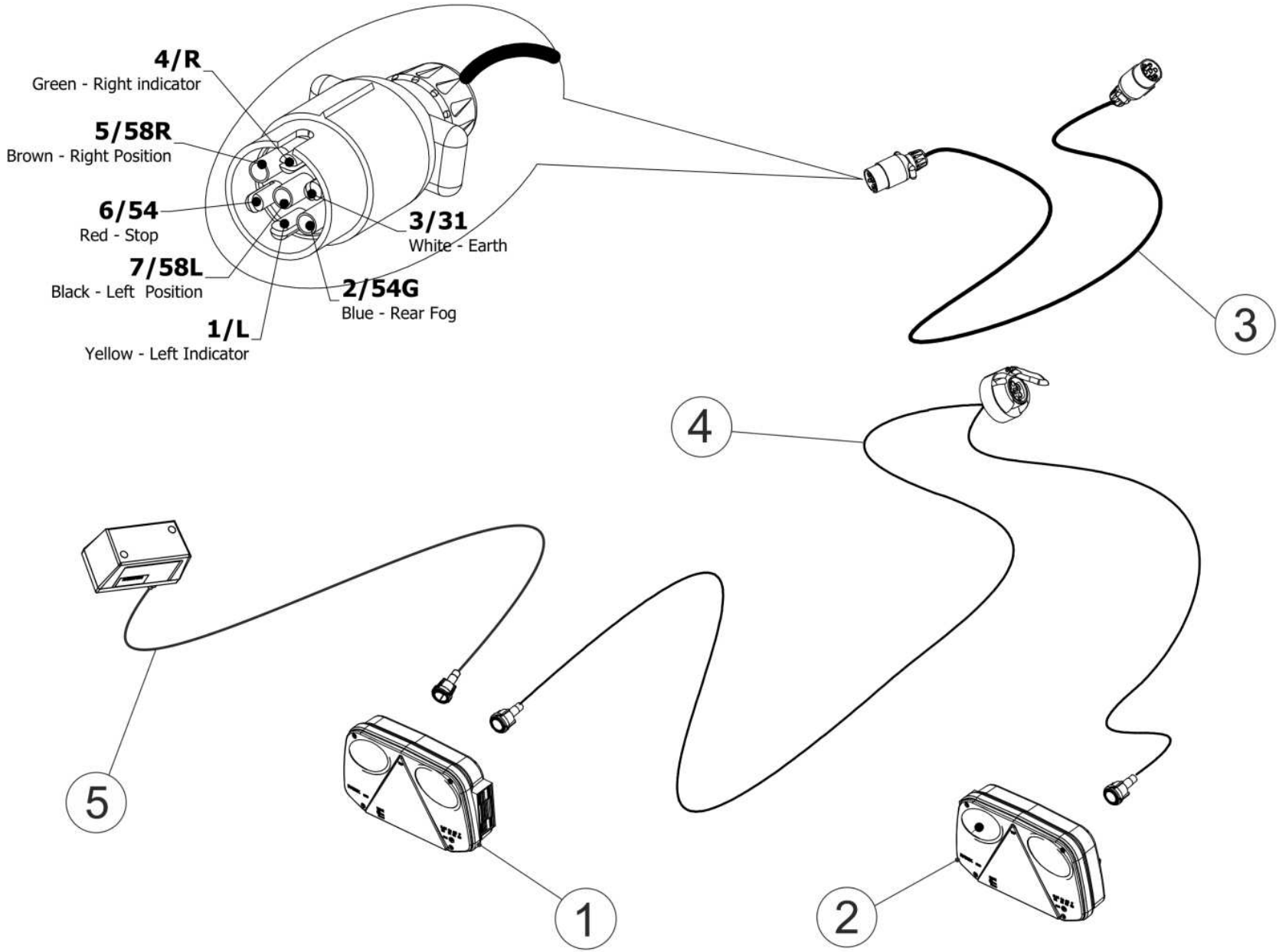

| No. | Part No | Description | Qty |
|---|---|---|---|
| 0 | CEL00943 | ELECTRICAL LIGHTING KIT- RADEX<br>*CAN NOT BE USED ON C490 MACHINES (INCLUDES ITEMS 1 THROUGH 4) CEL01691 CAN BE USED AS AN ALTERNATIVE* | 1 |
| 0 | CEL01691 | LIGHTING KIT C490 (RADEX)<br>*REQUIRED ON C490 MACHINES ONLY (INCLUDES ITEMS 1 THROUGH 4)* | 1 |
| 1 | CEL00700 | TAIL LIGHT RADEX LEFT<br>*COMPLETE LIGHT UNIT LHS* | 1 |
| 1a | CEL00788 | LIGHT LENS RADEX 2800 LHS<br>*LENS ONLY LHS* | 1 |
| 1b | CEL00951 | RADEX RED PLUG KIT (LEFT)<br>*KIT CONTAINS CONNECTOR, HANDLE, CABLE-PROTECTION & 5x CRIMP TERMINALS* | 1 |
| 2 | CEL00701 | TAIL LIGHT RADEX RIGHT<br>*COMPLETE LIGHT UNIT RHS* | 1 |
| 2a | CEL00787 | LIGHT LENS RADEX 2800 RHS<br>*LENS ONLY RHS* | 1 |
| 2b | CEL00950 | RADEX GREEN PLUG KIT (RIGHT)<br>*KIT CONTAINS CONNECTOR, HANDLE, CABLE-PROTECTION & 5x CRIMP TERMINALS* | 1 |
| 3 | CEL00765 | LIGHTING LOOM EXTENSION | 1 |
| 3a | CEL01505 | LIGHT LOOM ADAPTER (AMERICA)<br>*USED TO CONNECT LIGHTING ON MACHINES WITHIN THE USA & CANADA* | 1 |
| 3b | CEL01587 | 7 PIN LIGHTING PLUG SAE J560 | 1 |
| 4 | CEL00764 | LIGHTING LOOM<br>*CAN NOT BE USED ON C490 MACHINES (CEL01690 CAN BE USED AS AN ALTERNATIVE)* | 1 |
| 4 | CEL01690 | LIGHTING LOOM C490<br>*REQUIRED ON C490 MACHINES ONLY* | 1 |
| 5 | CEL00720 | REG PLATE LIGHT (RADEX)<br>*OPTIONAL* | 1 |

| No. | Part No | Description | Qty |
|---|---|---|---|

## Camera & monitor kit (1079)

| No. | Part No | Description | Qty |
|---|---|---|---|
| 1 | CEL00961 | CAMERA MALE PHONO CONNECTOR | 1 |
| 2 | CEL01371 | RCA PHONO SOCKET FEMALE 2WAY | 1 |
| 3 | CEL01593 | DOUBLE PHONO ADAPTOR | 1 |
| 4 | CEL01630 | FUSE 250MA 5X20MM GLASS | 1 |
| 4 | CEL01631 | FUSE 500MA 5X20MM GLASS | 1 |
| 5a | CEL01609 | ISOCAN - FENDT CAMERA ADAPTOR | 1 |
| 5b | CEL01747 | 4 PIN - FENDT CAMERA ADAPTER | 1 |
| 6 | CEL01520 | SECOND CAMERA POWER ADAPTER | 1 |
| 7 | CEL01585 | PHONO TO CAMERA CONNECTOR | 1 |
| 8 | CEL01532 | TWIN CAMERA ADAPTER | 1 |
| 9 | KST00074 | CAMERA MOUNTING KIT | 1 |
| *INCLUDES CONNECTOR CABLE (ITEM 9a)* | | | |
| 9a | CEL00034 | LOOM POWER CCTV & AUTO CONT' | 1 |
| 10 | CEL00903 | CAMERA-ISOCAN SIGNAL CABLE | 1 |
| 11 | CEL00900 | COLOUR CAMERA MK1 | 1 |
| 12 | CEL01541 | CAMERA EXTENSION 5M HIGH-FLEX | 1 |
| 13 | KST00064 | 2ND CAMERA KIT ISOCAN | 1 |
| *INCLUDES ITEMS 10, 11 & 12* | | | |
| 14 | CEL01506 | CAMERA MONITOR | 1 |
| 15 | CEL01550 | CAMERA EXTENSION CABLE 10M | 1 |
| 15 | CEL01556 | CAMERA EXTENSION CABLE 3M | 1 |
| 16 | CEL01533 | COLOUR CAMERA MK2 | 1 |
| 17 | KST00068 | CAMERA & MONITOR KIT | 1 |
| *INCLUDES ITEMS 14, 15 & 16* | | | |
| 18 | CEL01655 | QUAD CAMERA MONITOR | 1 |
| 19 | CEL00064 | LOOM COBO WHITE CON EURO LEAD | 1 |
| 20 | CEL01550 | CAMERA EXTENSION CABLE 10M | 2 |
| 21 | CEL01533 | COLOUR CAMERA MK2 | 2 |
| 22 | ATR00047 | DOUBLE CAMERA BRACKET COMP ASSY | 1 |
| 23 | KST00100 | DUAL CAMERA COMP KIT FRT MOWER | 1 |
| *INCLUDES ITEMS 18, 19, 20, 21 & 22* | | | |

| No. | Part No | Description | Qty |
|---|---|---|---|

## Decals 1 (755)

Keep clear of the machine while working.

(CST00014)

Keep hands clear of rotating rollers.

(CST00017)

Keep hands out of crush area.

(CST00019)

Check wheel nuts daily.

(CST00020)

Lifting-eye/ lift-hook location.

(CST00032)

Grease daily.

(CST00060)

Do not dismantle.
High pressure always.

(CST00056)

Do not stand on the platform when machine is moving or working.

(CST00107)

Keep clear of pickup area with machine/engine running.

(CST00108)

Read instruction manual before use.

(CST00110)

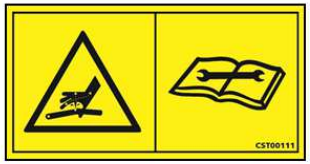

Avoid hydraulic fluid escaping under pressure.

(CST00111)

Remove key from tractor before performing maintenance.

(CST00113)

| No. | Part No | Description | Qty |
|---|---|---|---|
| 1 | CST00014 | DECAL WARNING!ROTATING ELEMENT | 1 |
| 2 | CST00017 | DECAL ROTATING ELEMENTs 214 | 4 |
| 3 | CST00019 | DECAL CRUSHED HAND | 2 |
| 4 | CST00020 | DECAL CHECK WHEEL NUTS | 2 |
| 5 | CST00032 | DECAL LIFTING HOOK | 4 |
| 6 | CST00060 | DECAL GREASE GUN | 6 |
| 7 | CST00056 | DECAL ACCUMULATOR WARNING | 1 |
| 8 | CST00107 | DECAL NO STANDING ON PLATFORM | 1 |
| 9 | CST00108 | DECAL ROTATING PICK UP REEL | 2 |
| 10 | CST00110 | DECAL READ MANUAL | 1 |
| 11 | CST00111 | DECAL HYDRAULIC WARNING | 1 |
| 12 | CST00113 | DECAL REMOVE KEY | 1 |

| No. | Part No | Description | Qty |
|---|---|---|---|

## Decals 2 (756)

Close protective covers before operating the machine.

**(CST00114)**

Slowly release hydraulic pressure before carrying out maintenance.

**(CST00115)**

Ensure tyre pressure is at 1.38 BAR (20 P.S.I).

**(CST00119)**

Keep hands out of crush area between roller & chassis rail.

**(CST00120)**

Maximum hydraulic pressure & PTO speed.

**(CST00121)**

General Warnings!

**(CST00134)**

Ensure that bystanders are outside the "***danger zone***" before operating tailgate.

**(CST00140)**

To avoid injury stay clear of the "***danger zone***" while machine is operating.

**(CST00141)**

Never adjust or reach into the netter unless the PTO has been disengaged and tractor shut down.

**(CST00142)**

Stay clear of rotating PTO shaft. Entanglement in rotating drive line can cause serious injury or death.

**(CST00143)**

Crush Hazard. Keep hands clear of rotating elements.

**(CST00144)**

| No. | Part No | Description | Qty |
|---|---|---|---|
| 1 | CST00114 | DECAL CLOSE PROTECTIVE COVERS | 2 |
| 2 | CST00115 | DECAL ACCUMULATOR PRESSURE | 1 |
| 3 | CST00119 | DECAL TYRE PRESSURE | 2 |
| 4 | CST00120 | DECAL CRUSHED HAND | 2 |
| 5 | CST00121 | DECAL OIL PRESSURE/PTO RPM | 1 |
| 6 | CST00134 | DECAL GENERIC WARNINGS | 1 |
| 7 | CST00140 | DECAL MAN CAUGHT IN DOOR | 2 |
| 8 | CST00141 | DECAL DRAWBAR SWING | 1 |
| 9 | CST00142 | DECAL HAND IN CHAIN SPROCKET | 3 |
| 10 | CST00143 | DECAL MAN CAUGHT IN PTO | 1 |
| 11 | CST00144 | DECAL HAND ENTRAPMEMT 231 | 2 |

| No. | Part No | Description | Qty |
|---|---|---|---|

## Decals 3 (757)

Disconnect the power supply and turn off the tractor if welding or working on the electrical system.

**(CST00145)**

To avoid injury stay clear of tailgate while it is being raised and lowered.

**(CST00146)**

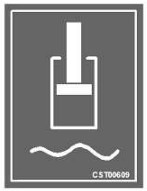


The control lever operating the pick-up reel should be in the 'float' position.

**(CST00609)**

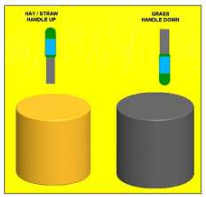


Handle UP when baling hay or straw. Handle DOWN when baling silage or grass.

**(CST00656)**

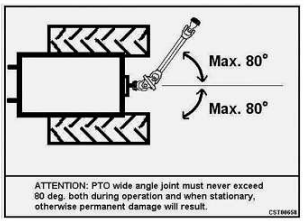


The PTO wide angle joint must never exceed 80°, or permanent damage may result.

**(CST00658)**

McHale logo

**(CST00710)**

Wheel direction.

**(CST00711)**

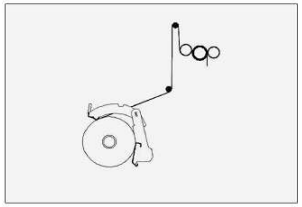

Diagram of net path through feeding rollers.

**(CST00713)**

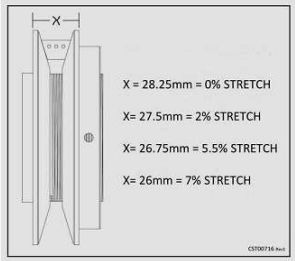


Variable pulley settings to adjust the tension of the net.

**(CST00716)**

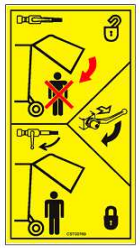

Always lock the tailgate in place before working on the open bale chamber.

**(CST00769)**

| No. | Part No | Description | Qty |
|---|---|---|---|
| 1 | CST00145 | DECAL DISCONNECT POWER SUPPLY | 1 |
| 2 | CST00146 | DECAL MAN BEHIND BALER | 2 |
| 3 | CST00609 | DECAL REEL FLOTATION | 1 |
| 4 | CST00656 | DECAL PROXIMITY SENSOR | 1 |
| 5 | CST00658 | DECAL PTO MAX OPERATING ANGLE | 1 |
| 6 | CST00710 | DECAL MCHALE LOGO (BACK DOOR) | 1 |
| 7 | CST00711 | DECAL WHEEL ROTATION | 2 |
| 8 | CST00713 | DECAL NET PATH | 1 |
| 9 | CST00716 | DECAL NET PULLEY ADJ SCALE | 1 |
| 10 | CST00769 | DECAL DOOR LOCK F5000 | 3 |

| No. | Part No | Description | Qty |
|---|---|---|---|

## Decals 4 (758)

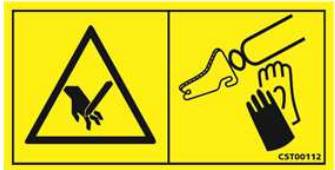


Remove knives with the correct tool & wear protective gloves.

**(CST00112)**

Knife release lever position, horizontal-locked, vertical-unlocked. Standard knives

**(CST00118)**

Net amount setting.

**(CST00136)**

Knife release lever position, horizontal–unlocked, vertical-locked. German knives

**(CST00606)**

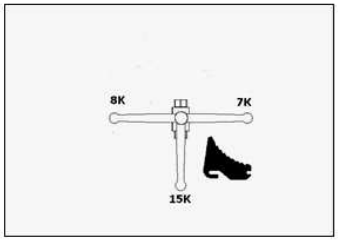


Knife selection tap **F5500**.

Only applicable to machines with selectable knife option.

7/8/15 Knives **(CST00714)**

12/13/25 Knives **(CST00793)**

McHale panel RH

**(CST00679)**

McHale panel LH

**(CST00680)**

Model Series

**(CST00709)**

| No. | Part No | Description | Qty |
|---|---|---|---|
| 1 | CST00112 | DECAL WARNING!SHARP KNIVES | 2 |
| 2 | CST00118 | DECAL KNIFE LOCK POSITION | 1 |
| 3 | CST00136 | DECAL FUSION NETTER AMOUNT | 1 |
| 4 | CST00606 | DECAL GERMAN KNIFE LOCK | 1 |
| *GERMAN KNIVES ONLY - UP TO SERIAL No 710086* | | | |
| 5 | CST00714 | DECAL KNIFE SELECT 7-8-15K | 1 |
| 5 | CST00793 | DECAL KNIFE SELECT 12-13-25K | 1 |
| 6 | CST00679 | DECAL RHS RECESS MCHALE | 1 |
| 7 | CST00680 | DECAL LHS RECESS MCHALE | 1 |
| 8 | CST00709 | DECAL F5500 LOGO | 3 |

| No. | Part No | Description | Qty |
|---|---|---|---|